Wayne
A GE Energy Business

Parts Manual

Wayne Helix™ dispenser

WM048522

Rev 04



AE

Read this manual before starting any installation, service, or maintenance work

Fuel dispensers contain both electrical components and a hazardous, flammable and potentially explosive liquid. Failure to follow the below precautions and the Warning and Caution instructions in this manual may result in serious injury. In addition, it is your responsibility to follow all rules, codes, regulations, and laws that apply to your location and type of work being performed.

Safety precautions

Make sure that ALL power to the dispenser is turned OFF before opening the cabinet or starting work. Physically lock, restrict access to, and/or tag the circuit breakers you turn off. In addition, be sure to trip (close) all emergency valves under the dispenser (if installed) BEFORE you begin.

Make sure that you locate the facility's emergency shut-off button, and know how to turn OFF power to the dispenser and submersible pumps (if any) in an emergency.

Never allow a leaking pump to run! Use appropriate measures to clean up any fuel on the forecourt, and ensure that any leaks or issues that could cause a leak are attended to and repaired immediately.

Indicators and notations

Note!

Indicates extra information or tip.

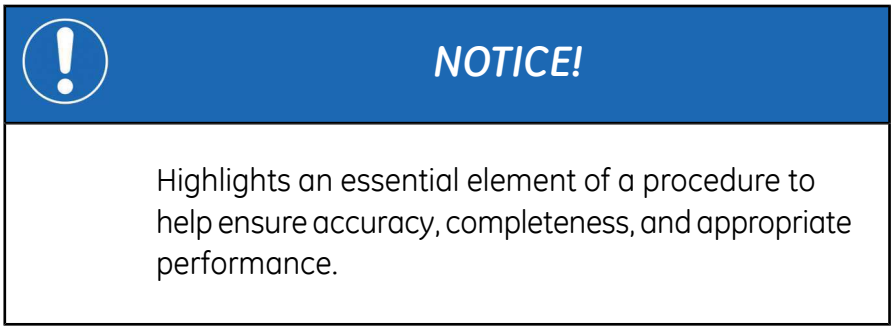

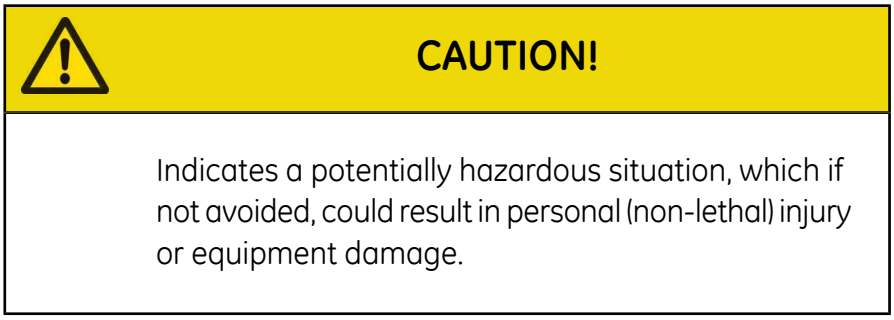



WARNING!

INDICATES A POTENTIALLY HAZARDOUS SITUATION, WHICH, IF NOT AVOIDED COULD RESULT IN DEATH OR SERIOUS INJURY.



DANGER!

INDICATES A HAZARDOUS SITUATION, WHICH, IF NOT AVOIDED, WILL RESULT IN DEATH OR SERIOUS INJURY.

Table of Contents

1 Health and Safety Regulations 7
2 Introduction 8
2.1 Separation of power supply 9
2.2 Electrostatic discharge (ESD) 9
2.3 Dispensers covered 10
2.4 Abbreviations 10
2.5 Side A - Side B 11
3 Quick reference 12
4 Hydraulic configurations (tubes) 13
4.1 Helix 1000 13
4.2 Helix 2000 - Small style 15
4.3 Helix 4000 - Narrow body 18
4.4 Helix 5000- Wide body 23
4.5 Helix 6000 - C-style 32
5 Electronic head 36
5.1 Frame module, EHPM 36
5.2 Frame EHPM, internal 37
5.3 Frame exterior stucture , EHPM 38
5.4 Frame Helix 1000 39
5.5 iGem board 40
5.5.1 Sealing of programmed load switch 41
5.6 Connection board, LEE 41
5.7 ISB, module LEE 42
5.8 Power supply module, LEE 43
5.9 Bezel 44
5.9.1 LEE Bezel 44
5.9.2 EH Bezel module, EH Sales/volume 45
5.9.3 PT Bezel for 5.7" display 55
5.9.4 Bezel Helix 1000 56
5.10 Display module 57
5.10.1 Display module, softkeys and qVGA, Monochrome 57
5.10.2 Display module, softkeys and qVGA, Color 58
5.10.3 Soft key for 10.4" display with boards 59
5.11 iX board 60
5.11.1 iX board (5.7" display monochrome) 60
5.11.2 iX board (5.7" display color) 61
5.12 Nozzle converter 62
5.13 Keypad 62
5.13.1 SPM keypad 62
5.13.2 Preset keypad 63
5.13.3 Hypercom K1200+H2210 keypad 64
5.13.4 Hypercom, Artema 64

5.13.5 Ingenico iUP/iUC250, Card reader and Key pad *65*
5.13.6 Verifone UX100 ..... *66*
5.13.7 Verifone UX110 ..... *66*
5.14 Card reader 68
5.14.1 Card reader, chip/mag secure injected (Zebra/medium postion) *68*
5.14.2 Card reader, chip/mag secyre injected, (Citizen/high postion) *69*
5.14.3 Card reader, mag type, (ADA/low position) *70*
5.14.4 Card reader, mag type, (Zebra/medium postion) *70*
5.14.5 Card reader, mag type, (Citizen/High postion) *71*
5.14.6 Hypercom K1200+H2210 cardreader *72*
5.14.7 Hypercom, Artema *72*
5.14.8 Ingenico iUP/iUC250, Card reader and Key pad *73*
5.14.9 Verifone UX300 ..... *74*
5.15 Contactless reader 74
5.16 Barcode scanner 75
5.17 iButton/Dallas key 75
5.18 Printer 76
5.18.1 Printer, 60mm, Zebra *76*
5.18.2 Printer, 60mm, Zebra (5,7''' display) *76*
5.18.3 Printer, 60mm, Zebra (10,4''' display) *77*
5.18.4 Printer, 80mm, Zebra (5,7'' display) *77*
5.18.5 Printer, 80mm, Zebra (10,4'' display) *78*
5.18.6 Printer, Citizen *79*
5.19 Cover decal area PT 80
5.20 Lock, PT 81
5.21 Printer door 82
5.21.1 Printer door small *82*
5.21.2 Printer door large *83*
5.22 Push to start button 84
5.23 UPD board 85
5.23.1 UPD board, LEE *85*
5.23.2 UPD board, EH *86*
5.24 Sales/Volume display 86
5.24.1 Sales/Volume display *86*
5.24.2 Sales/Volume display with single UPD *87*
5.24.3 Sales/Volume display dual *88*
5.25 U-frame and decor 89
5.26 Speaker 90
5.26.1 Speaker, media *90*
5.26.2 Speaker, intercom *91*
5.27 EMT 91
5.28 Non-PT config. 92
5.29 Blank panel 93
5.30 Intercom call button 94
5.31 Stop switch 94

5.32 Emergency stop button ... 94
5.33 Indicator lamp ... 95
5.34 Annunciator/buzzer/beeper for PT ... 95
5.35 On/off switch ... 96
5.36 Security switch ... 96
5.36.1 Security switch - std ... 96
5.36.2 Security switch - PT ... 97
5.37 Nozzle converter board ... 98
5.38 Float ... 99
5.39 Ethernet switch ... 99
5.40 LED-Com ... 100
5.41 Healy ... 100
5.42 PCN box ... 101
5.43 Heater/fan ... 102
5.44 MUX (multiplexor) ... 103
5.45 Cable harness ... 103
5.45.1 Assembly PT bezel ... 103
5.46 Switchable motor ... 104
5.47 High speed board ... 104
6 Hose handling ... 105
6.1 Tube clip ... 105
6.2 Nozzle boot ... 106
6.2.1 Nozzle boot, H-style ... 106
6.2.2 Nozzle boot, Small style ... 107
6.2.3 Nozzle boot Helix 1000 ... 108
6.3 Nozzle boot blank off plate ... 109
6.4 Nozzle boot roof ... 109
6.4.1 Nozzle boot roof, wide ... 109
6.4.2 Nozzle boot roof, narrow ... 110
6.4.3 Nozzle boot roof, small style ... 111
6.5 Top box ... 112
6.5.1 Top box wide 4 hoses, 8 hoses and narrow ... 112
6.5.2 Top box vapor module ... 113
6.6 Outlet casting module ... 114
6.7 Hose handling module ... 116
6.7.1 Hose handling module H-style ... 116
6.8 H-style hose retraction ... 117
6.8.1 Structure - H-style hose retraction ... 117
6.8.2 Hose connection - H-style hose retraction ... 119
6.8.3 Vapor recovery - H-style hose retraction ... 121
6.8.4 Hose outer outlet - H-style hose retraction ... 123
6.8.5 Hose inner outlet - H-style hose retraction ... 124
6.9 Helix 6000, Hose Handling ... 126
6.9.1 Assembly instruction, HHR ... 126

6.9.2 Column, HHR 127
6.9.3 Nozzle boot, auto on, HHR 128
6.9.4 Panel, HHR 129
6.9.5 Assembly instruction, HH 130
6.9.6 Column, HH 131
6.9.7 Nozzle boot, auto on, HH 132
6.9.8 Panel, HH 133
6.9.9 VR 134
6.9.10 Column with cover plates, HH 134
7 Hydraulic cabinet - tubes and couplings 135
7.1 Framework Helix 2000, 4000, 5000 135
7.2 Framework Helix 1000 136
7.3 Framework Helix 6000 137
7.4 Vapor Barrier 139
7.4.1 Vapor barrier, H-style 139
7.4.2 Vapor barrier, Helix 2000 (small style) 140
7.4.3 Vapor barrier, Helix 6000 142
7.5 Hydraulic module 143
7.5.1 Hydraulic module, remote 143
7.5.2 Hydraulic module, suction, incl. motor 144
7.6 Hydraulic 148
7.6.1 Pump cover - suction 148
7.6.2 Pump internal gear - suction 150
7.6.3 Plug pump unit - suction 151
7.6.4 iMeter™ 152
7.7 Pulser to iMeter™ 154
7.8 Filter, adaptor, nut, spout subassembly (remote) 155
7.9 Filter pot (suction) 156
7.10 Solenoid Valve, single 158
7.10.1 Solenoid Valve, single, UL 158
7.10.2 Solenoid Valve, single, IEC 159
7.11 Self check valve, Helix 6000 160
7.12 Healy VR 161
7.12.1 Coupling cross, Healy and Wayne VAC 161
7.12.2 Healy VR 162
7.13 Dürr VR 163
7.14 Vapor recovery, IEC 165
7.15 Vapor recovery Helix 1000 165
7.16 VaporGate 166
7.17 VaporGate Helix 1000 167
7.18 Air separation (suction) 168
7.19 Junction box 169
7.19.1 Junction box, Helix 2000, 4000, 5000, UL 169
7.19.2 Junction box, Helix 2000, 4000, 5000, IEC 170
7.19.3 Junction box, Helix 6000, IEC 171

7.20 Vapor barrier routing 172
7.20.1 Vapor barrier routing, Narrow, UL 172
7.20.2 Vapor barrier routing, Wide, UL 173
7.20.3 Vapor barrier routing, Wide, IEC 174
7.21 Nozzle switch module, LEE 175
7.22 Densimeter 176
7.23 ATC2 177
7.23.1 UL 177
7.23.2 IEC 178
8 Exterior 180
8.1 Helix 1000 180
8.1.1 Side panel Helix 1000 181
8.2 Helix 2000 - Small style 183
8.3 Helix 4000 & Helix 5000 - H-style 185
8.4 Helix 6000 - C-Style 187
9 Drip pan, Foundation frame, Adapter plate 188
9.1 Drip pan 188
9.2 Foundation frame & adapter plate 189
10 Tubes and couplings 190
10.1 Liquid tubes 190
10.1.1 H-style, high hose 190
10.1.2 C-style (Helix 6000) 194
10.2 Vapor recovery tubes 197
10.2.1 Helix 1000 197
10.2.2 Small style (Helix 2000) 198
10.2.3 H-style (Helix 4000, Helix 5000) 199
10.2.4 C-style (Helix 6000) 200
10.2.5 Common 206
10.3 Inlet tubes 206
10.3.1 Suction - flexible inlet tubes 207
10.3.2 Remote - inlet tubes 207
10.4 Tube between CPU's 208
10.5 Tubes, densimeter 208
10.6 Conduits 210
10.7 Conduit accessories 210
10.8 Couplings, IEC Vapor Recovery 211
10.9 Couplings, UL Vapor Recovery, common 211
10.10 Couplings, UL Healy Vapor Recovery 211
10.11 Couplings, densimeter 212
11 Hanging hardware 213
11.1 Nozzle 213
11.2 Nozzle covers 214
11.3 Splashguards 216

11.4 Hose 219
11.5 Hose sleeve 221
11.5.1 Hose sleeve for 16mm hose 221
11.5.2 Hose sleeve for 21mm hose 222
11.6 Break-awaway, sight glass etc 222
11.7 Nozzle lock - Padlock 224
11.8 Bayonet coupling 224
12 Cables 226
12.1 Misc. 226
12.2 Annunciator/buzzer/beeper for PT 226
12.3 ATC 227
12.4 Cable harness (LEE to EH) 227
12.5 Card reader 228
12.6 Citizen (UL only) 228
12.7 Barcode scanner 229
12.8 EMT 229
12.9 Heater 229
12.10 iButton/Dallas key 230
12.11 ISB 230
12.12 Junction box 231
12.12.1 Junction box UL 231
12.12.2 Junction box IEC 231
12.13 LED-Com 232
12.14 Media Display 233
12.15 MUX 233
12.16 Nozzle converter 233
12.17 Nozzle switch 234
12.18 Power supply 234
12.19 Preset 235
12.20 Protocol board cables 235
12.21 PT and media 236
12.22 Pulser 237
12.23 Single push-buttons 237
12.24 Speaker Intercom 238
12.25 SPM 238
12.26 Switchable motor, se page 104 239
12.27 UPD in EH 239
12.28 Zebra printer 239
12.29 4 User cables 240
13 Misc. (Tools / Remote control) 242
13.1 Tools / Remote control 242
13.2 UK Installaion, Helix 6000 242

1 Health and Safety Regulations

It is important that the following rules and regulations are followed when flammable liquids are used:

- It is prohibited to smoke and light fire or bring open flame close to the pump.
- Stop the engine while refuelling.
- The distribution box must be easily accessible and access must not be blocked by goods etc.
- Always ask a specialist to make electrical installations of any kind. Special regulations are applicable!
- Please watch for any leakage from pumps. If there is a leakage, cut all power to the pump and call Wayne After Sales Service.
- Always comply with the regulations regarding handling of petrol and oil, published by each oil company.
- Always comply with public authority requirements related to the vapor recovery system.
- Make sure that a suitable fire extinguisher is in place and is easily accessible.
- To avoid malfunction or damage to the pump, make sure that there is enough fuel in each tank.
- Adequate personal safety equipment should be used during maintenance of the equipment (gloves, breathing mask, glasses etc.).

2 Introduction

Also read "User Manual", "Installation manual" and "Service manual".

The supplier's product liability is only valid if no alterations, additions etc. have been made to the equipment without the supplier's express permission.

Use only genuine parts.

Consider the environment. Please don't print this document unless you really need to.

WARNING!

Disconnect mains power prior to any work, to prevent damage which may result in electric shock or fire.

WARNING!

Electrical components under ATEX marked with Ex **must not** be repaired and should be replaced as complete spare part in case of operational functional failure.

CAUTION!

Unauthorised personnel must not do service and maintenance. This may cause personal injury or property damage.

CAUTION!
Burn hazard



Avoid the heat sink on the electronic unit.

WARNING!

Mind the rotating V-belt when the cover of the hydraulic unit is removed! (Suction pump)

WARNING!

Use your protective equipment. (Protective mask, gloves etc.)

2.1 Separation of power supply

Separation is done by removing the main fuse of the pump on the station.

2.2 Electrostatic discharge (ESD)

Before service/maintenance of a pump discharging must be done. This is done when you open the covers of the pump with a key.

If an extensive repair work is to be done, discharge should be done regularly by touching the key.

2.3 Dispensers covered



Wayne Helix™ 1000 fuel dispenser

"Small style narrow"

IEC



Wayne Helix™ 2000 fuel dispenser

"Small style wide"

UL & IEC



Wayne Helix™ 4000 fuel dispenser

"H-style narrow"

UL & IEC



Wayne Helix™ 5000 fuel dispenser

"H-style wide"

UL & IEC



Wayne Helix™ 6000 fuel dispenser

"C-Style"

IEC

2.4 Abbreviations

ALU = Aluminum

CAT = Customer Activated Terminal

EH = Electronic Head

EHPM = Electronic Head and Payment Terminal

EMT = ElectroMechanical Totalizer

ESD = Electrostatic discharge

ISB = Intrinsically Safe Barrier

LEE = Lower Electronic Enclosure

LT = Low Temperature

LTS = Lift To Start

MUX = Multiplexor

PT = Pay Terminal

SPM = Secure Payment Module

Std = Standard

TRAC = Transponder Activated CAT

UPD = Unit Price Display

VR = Vapor Reocery

2.5 Side A - Side B

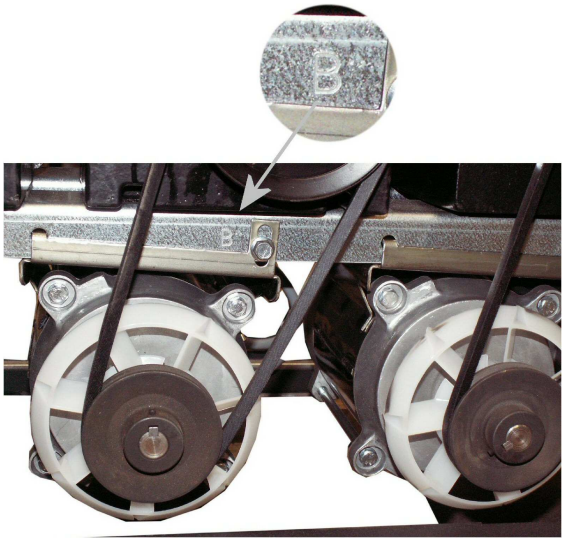

suction pump

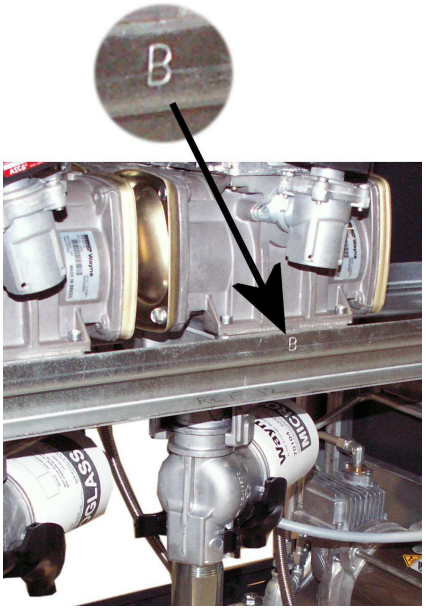

remote pump

3 Quick reference

Description	Page
Belt, Z-profile	144
Cable	226
Card reader	68
Cleaning kit for card readers	242
Connection board	41
Drip pan	188
Electromechanical totalizer with connector (EMT)	91
Hose	219
Hydraulic module	143
iGem™ boad (CPU board)	40
ISB (Intrinsically Safe Barrier)	42
iX board	60
Lock, individually keyed, 6 locks, 2 keys (for entire pump)	186
Motor	144
Nozzle	213
Power supply, +24V, 150W, global	43
Printer	76
Sales/volume display	86
SPM keypad	62

4 Hydraulic configurations (tubes)

Tubes and couplings see page 190.

4.1 Helix 1000

S11-210 130	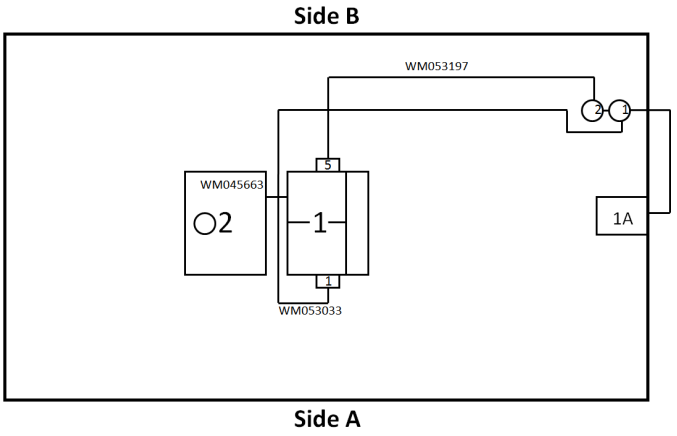
S22-211	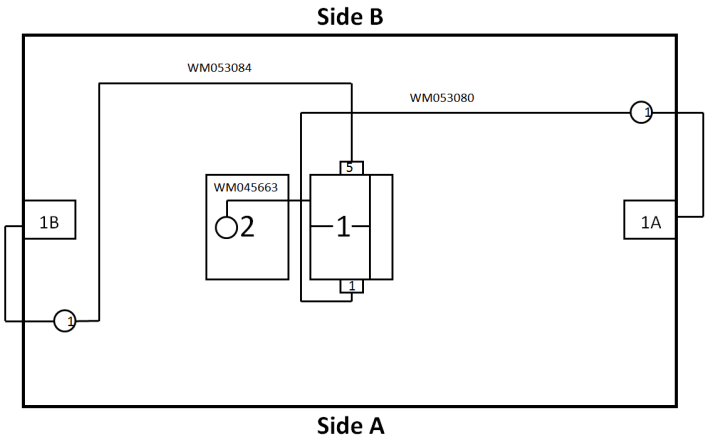
S11-211 130/40	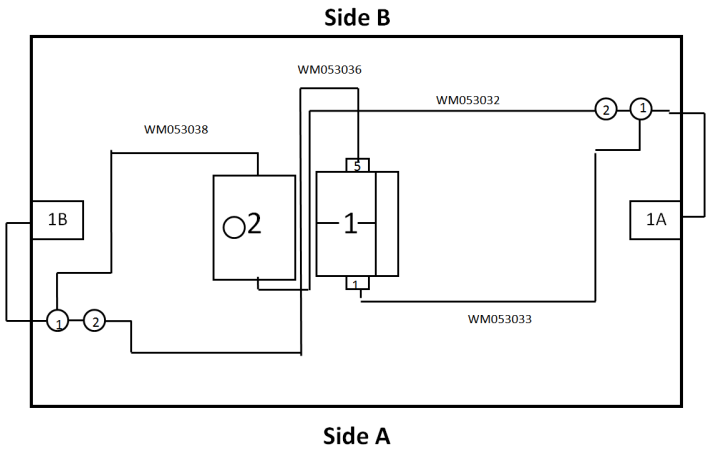

S11-110	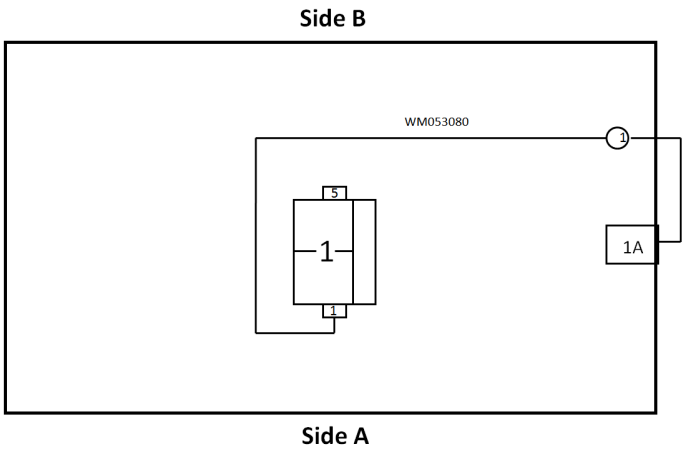
S11-11	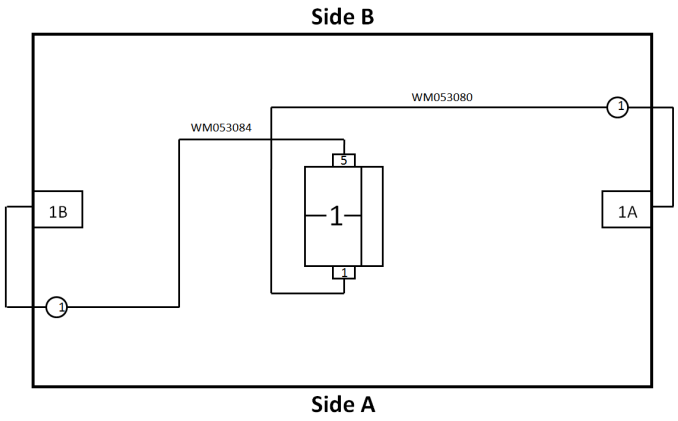
S11-110 90	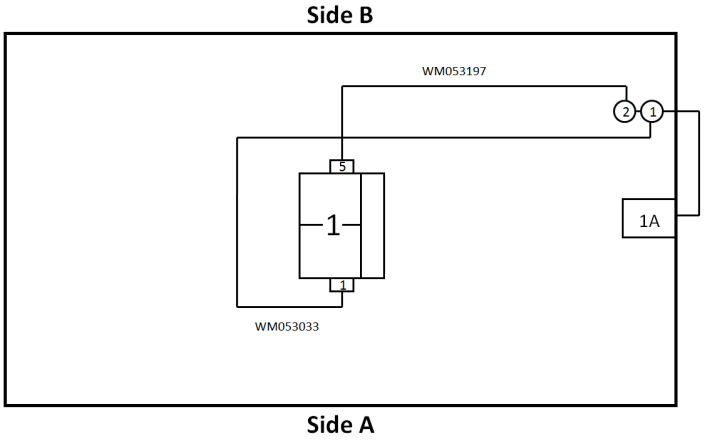

4.2 Helix 2000 - Small style

S(L/I)11-11	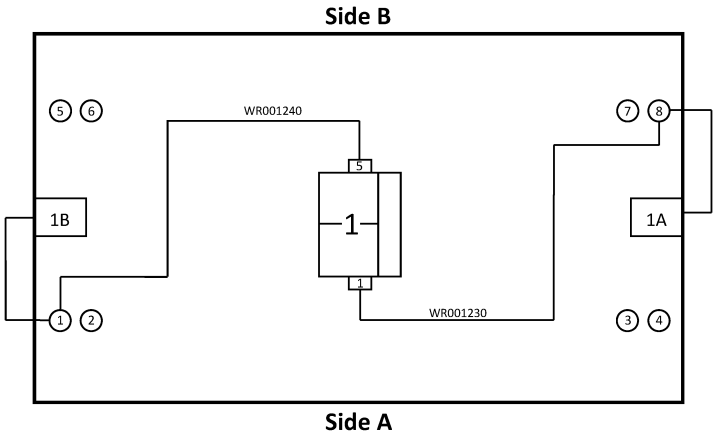
S(L/I)11-110	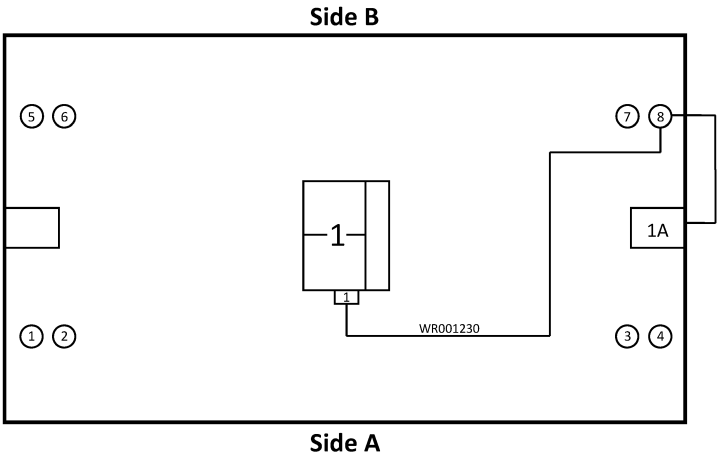
S(L/I)11-110 (90)	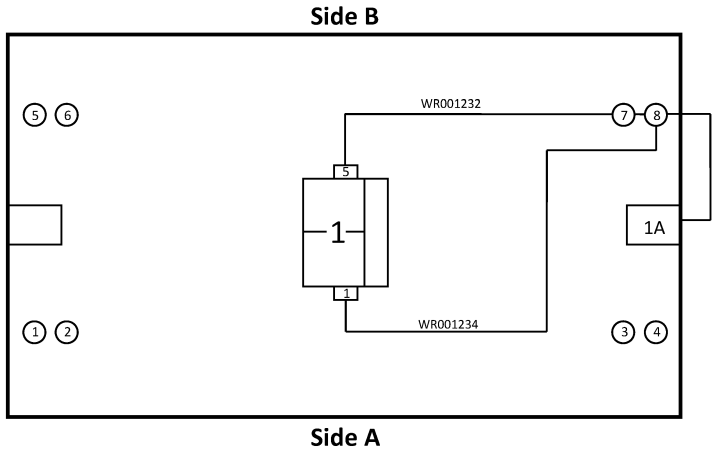

S(L/I)11-210 H	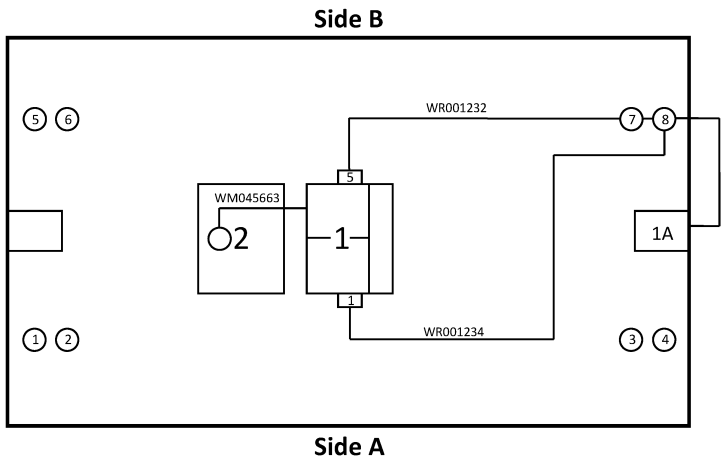
S(L/I)22-211	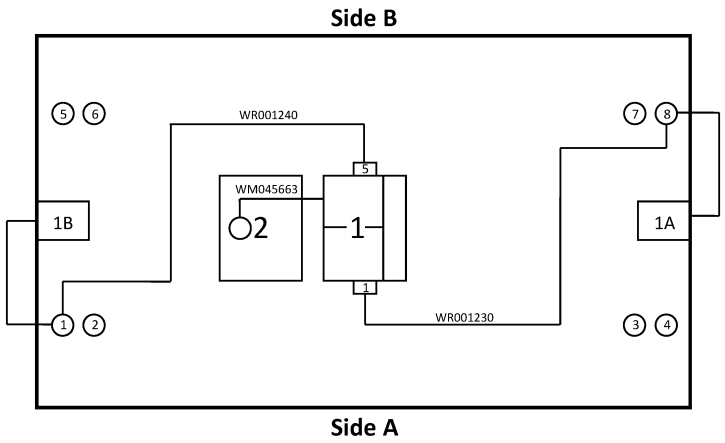
S(L/I)22-211 H (120/40)	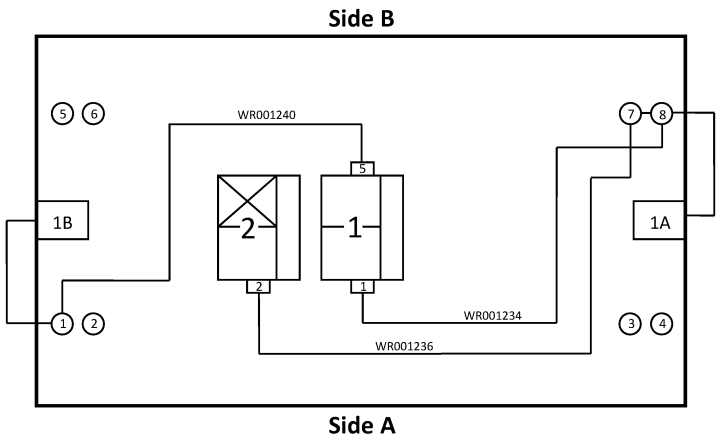

S(L/LU) 11-11	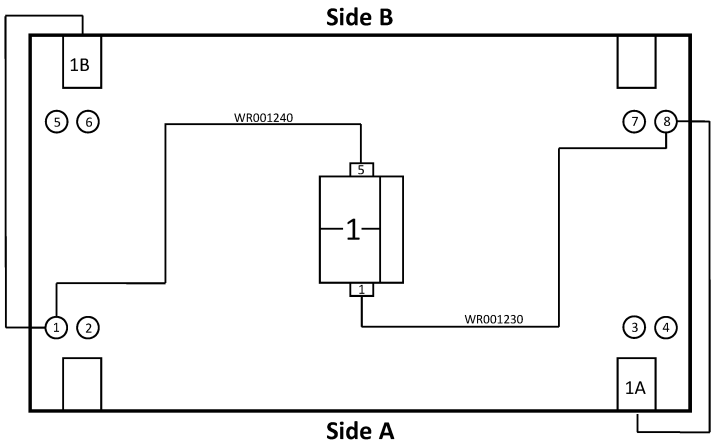
S(L/LU) 11-21 H	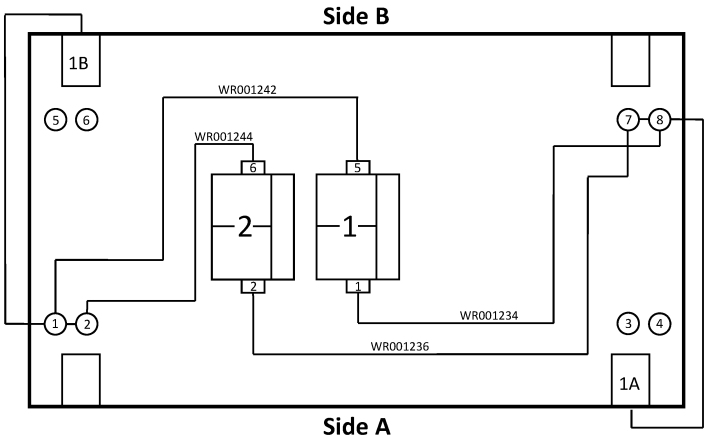
S(L/L) 11-210 H	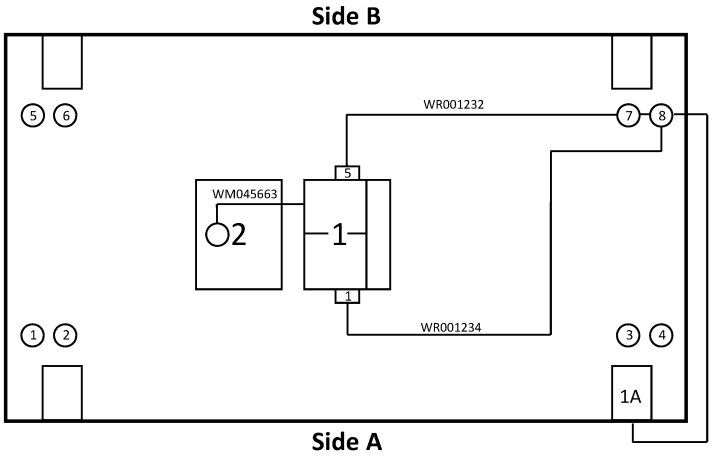

S(L/LU) 11-211 H (120/40)	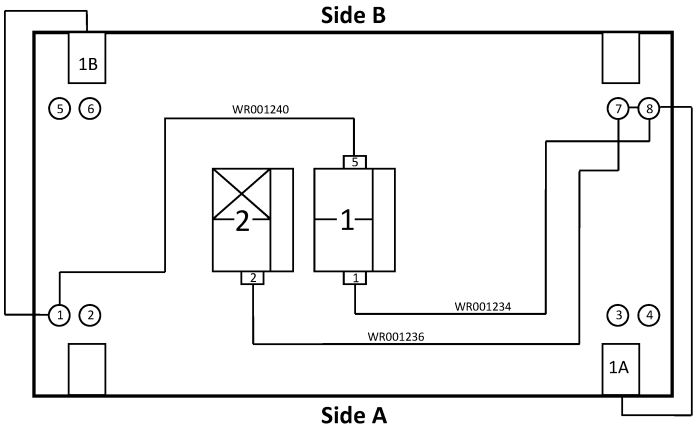
S(N/LU)22-22	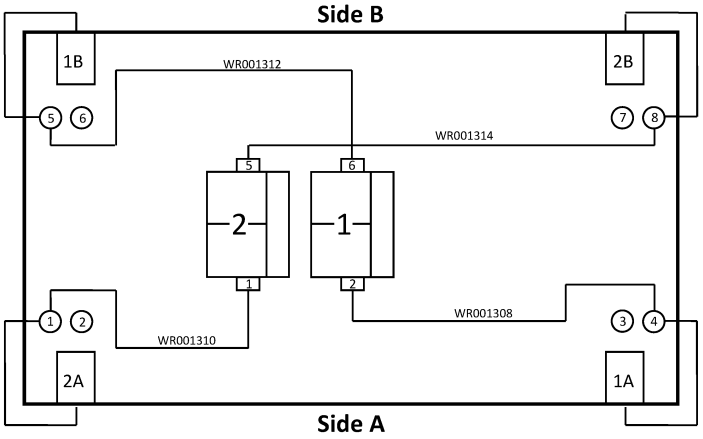

4.3 Helix 4000 - Narrow body

H(N/LU) 11-110	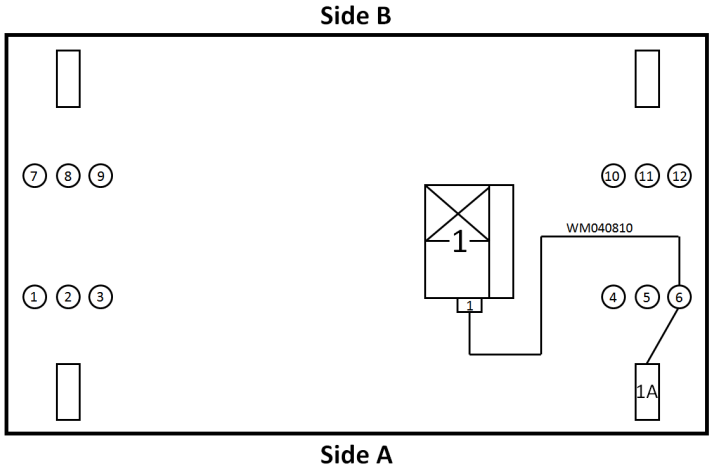

H(N/LU) 11-11	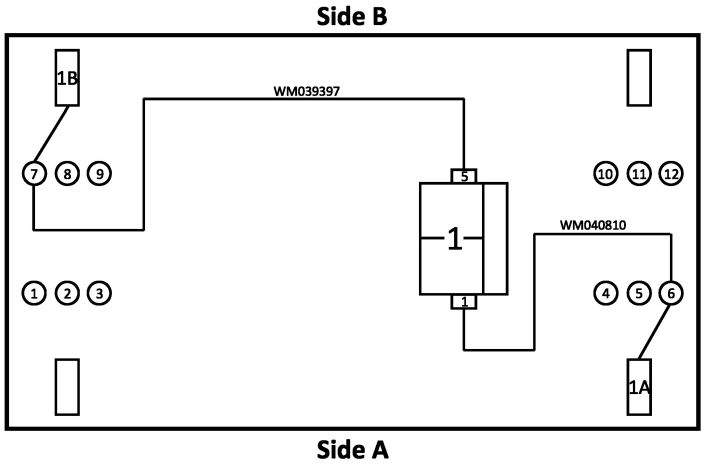
H(N/LU) 11-21 H H(N/LU) 23-21 H(N/LU) 24-21 H(N/LU) 25-21	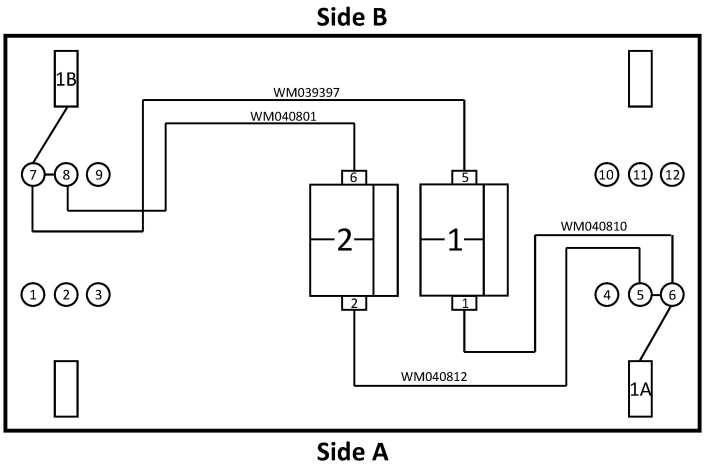
H(N/LU) 11-210 H	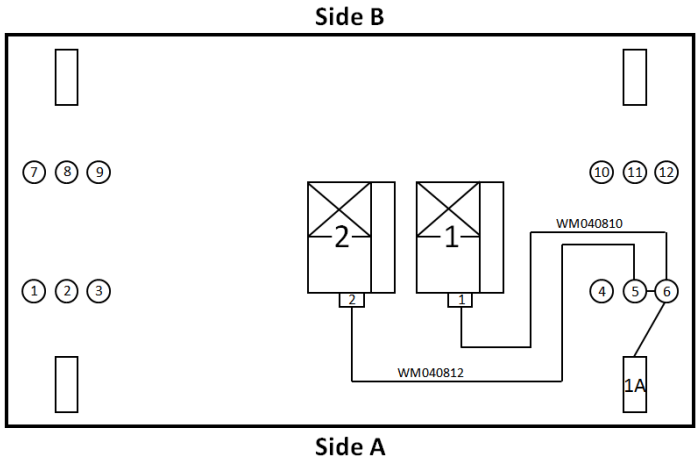

H(N/LU) 11-211 H (120/40)	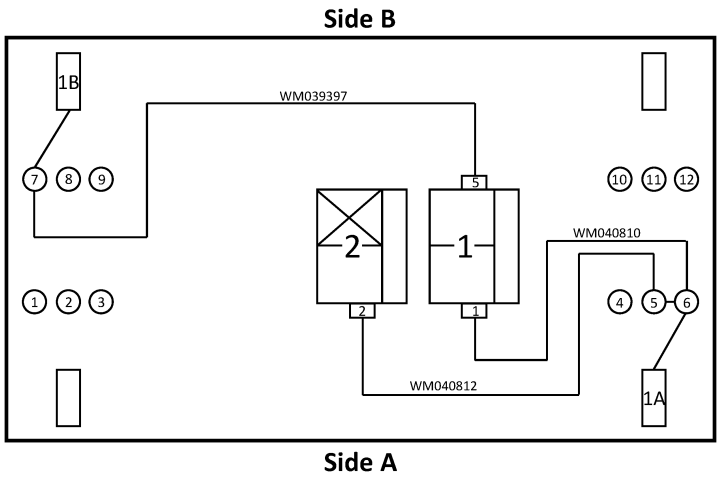
H(N/LU) 11-21 H SAT	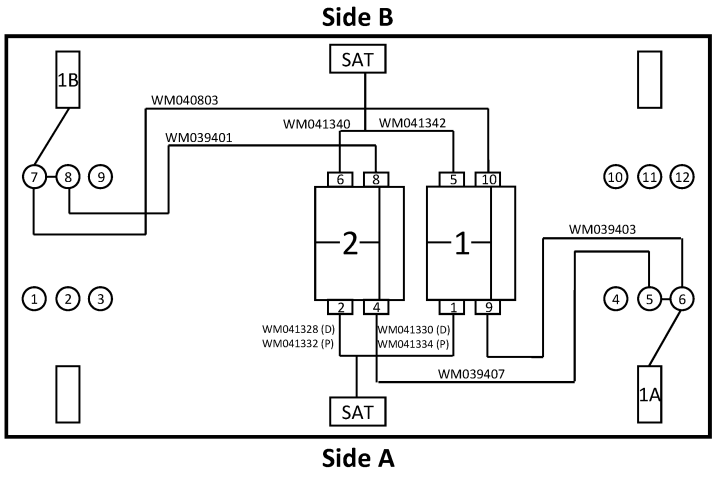
H(N/LU) 11-22 H (120/40) H(N/LU) 23-22	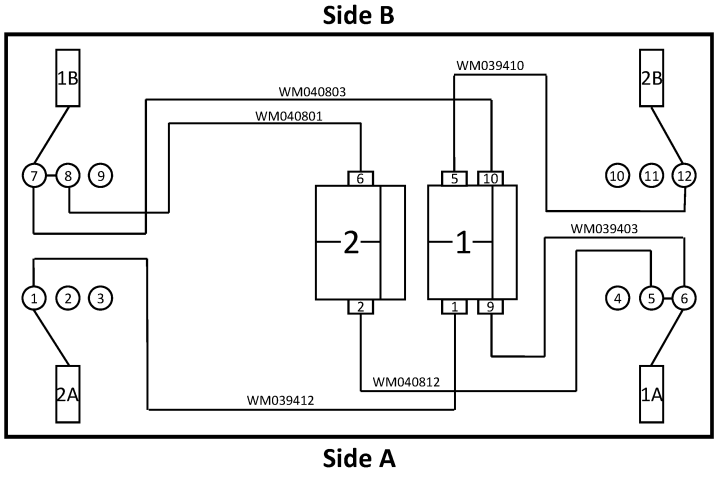

H(N/LU) 11-31 H (SIM)	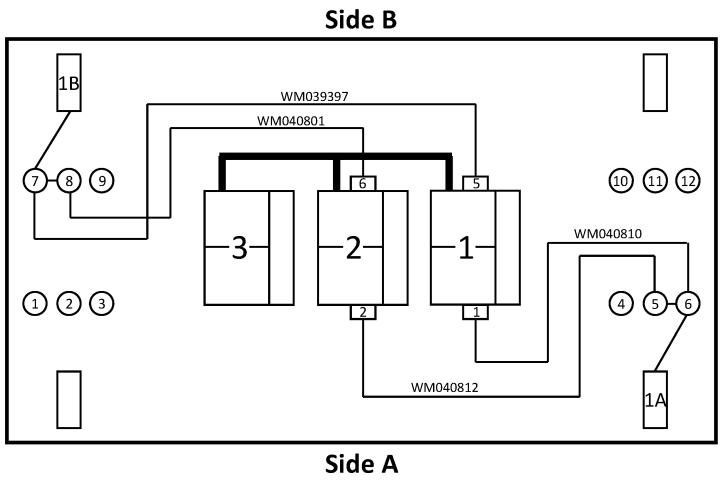
H(N/LU) 11-31 H (SIM) SAT	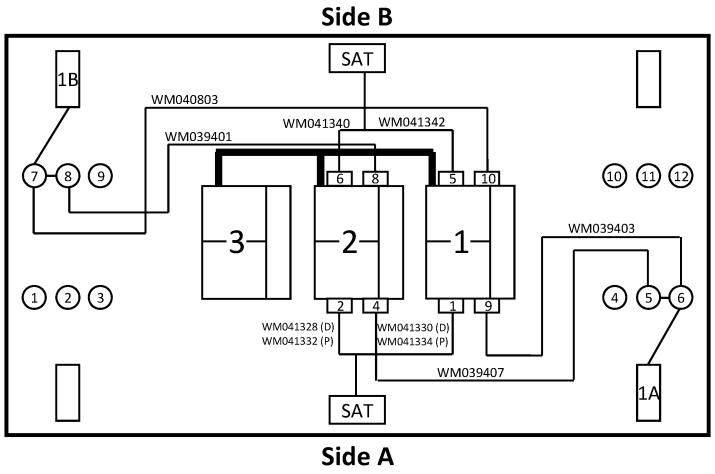
H(N/LU) 11-32 (120/40 SIM)	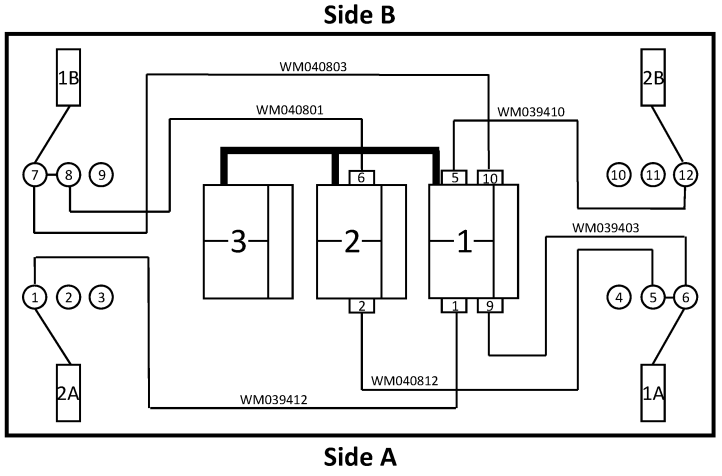

H(N/LU) 11-32 (120/40 SAT) H(N/LU) 22-32 (120/40 SAT)	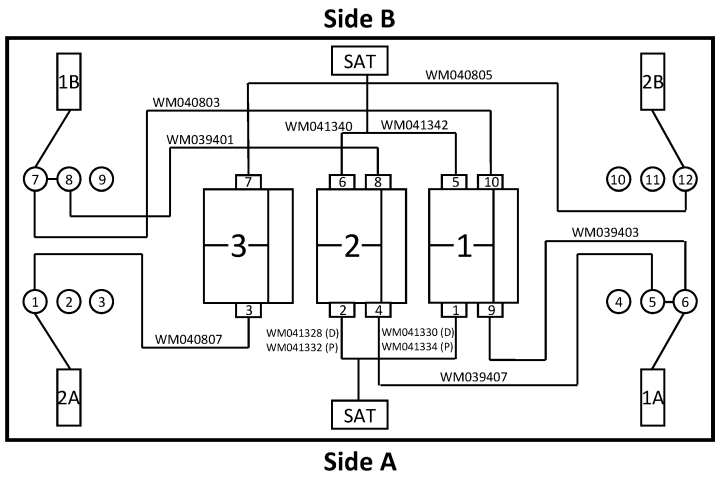
H(N/LU) 22-220	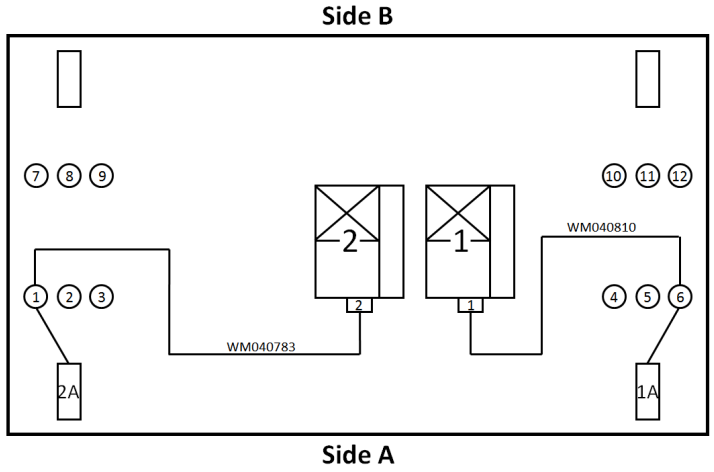
H(N/LU) 22-22 H(N/LU) 22-22 4U	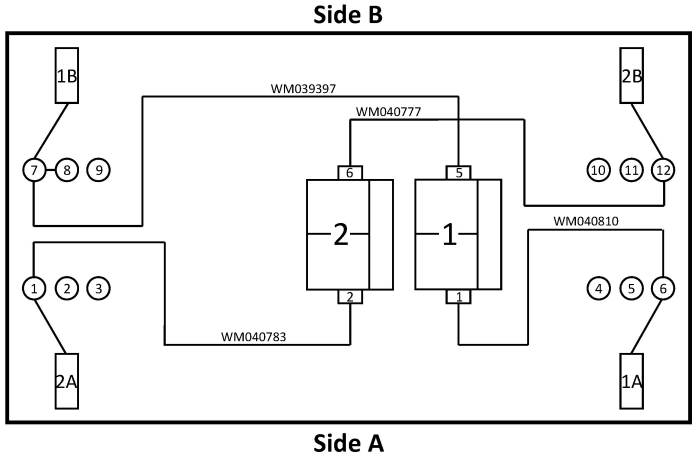

H(N/LU) 22-32 H H(N/LU) 34-32	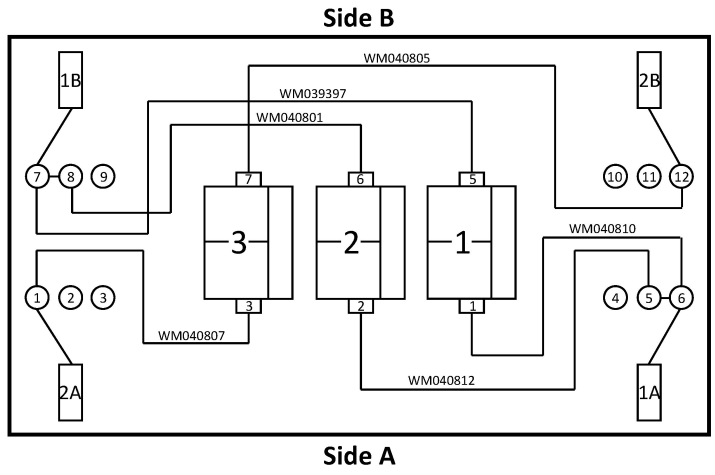
H(N/LU) 33-31	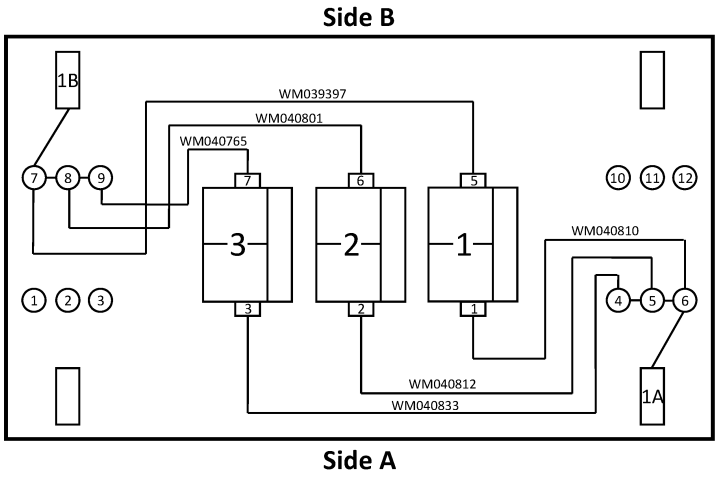

4.4 Helix 5000- Wide body

H(W/LU) 11-110	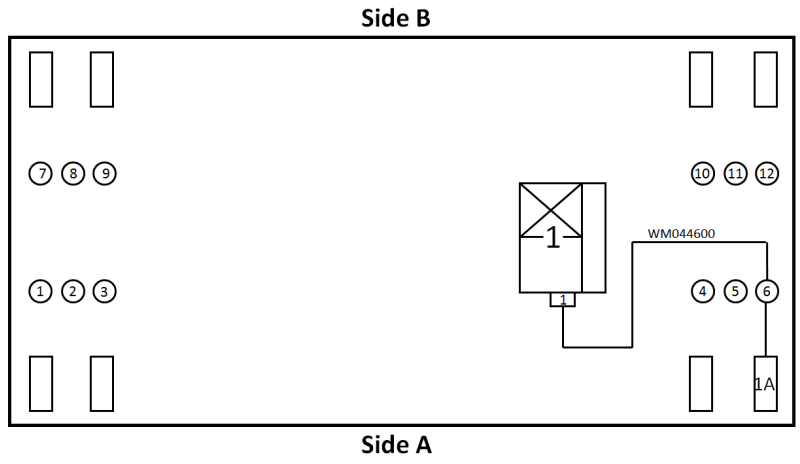

H(W/LU) 11-11	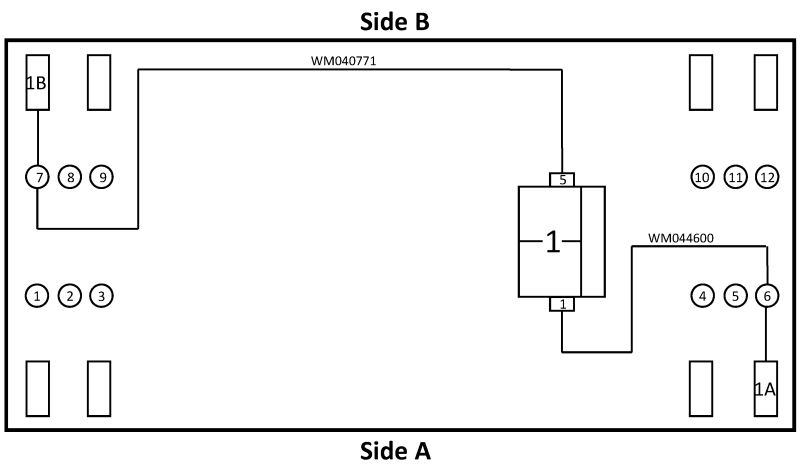
H(W/LU) 11-21 H H(W/LU) 23-21	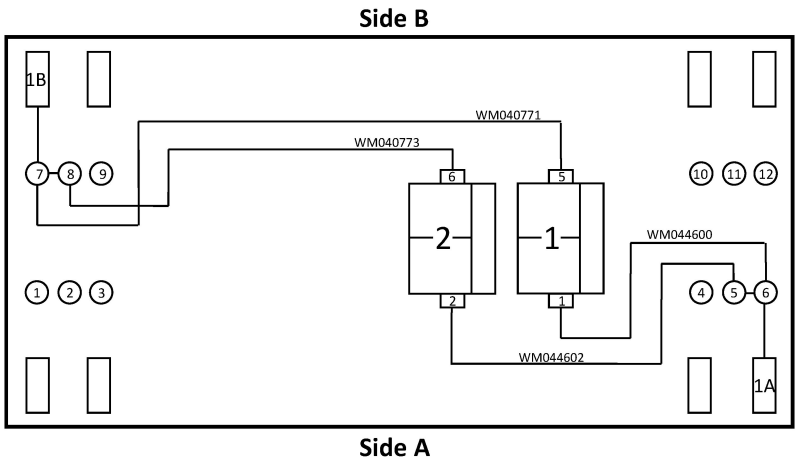
H(W/LU) 11-21 H SAT	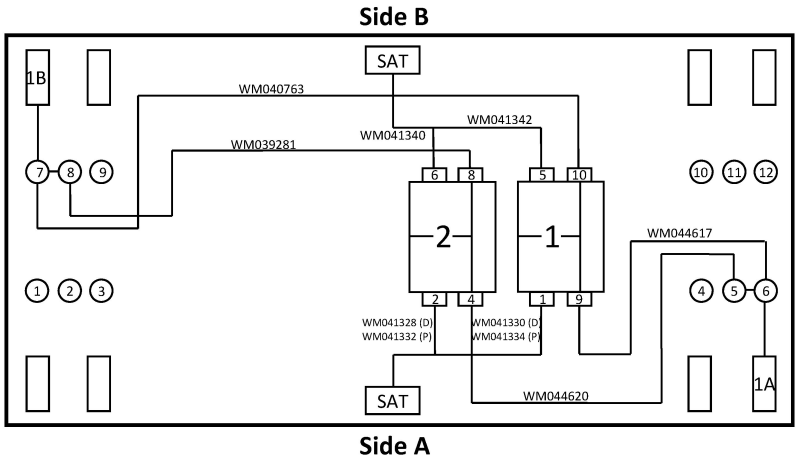

H(W/L) 11-22 H (120/40) H(W/L) 23-22	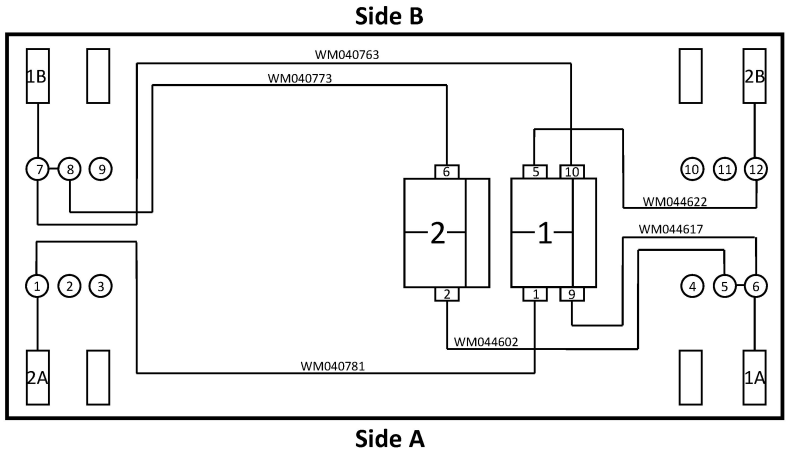
H(W/LU) 11-31 H (SIM)	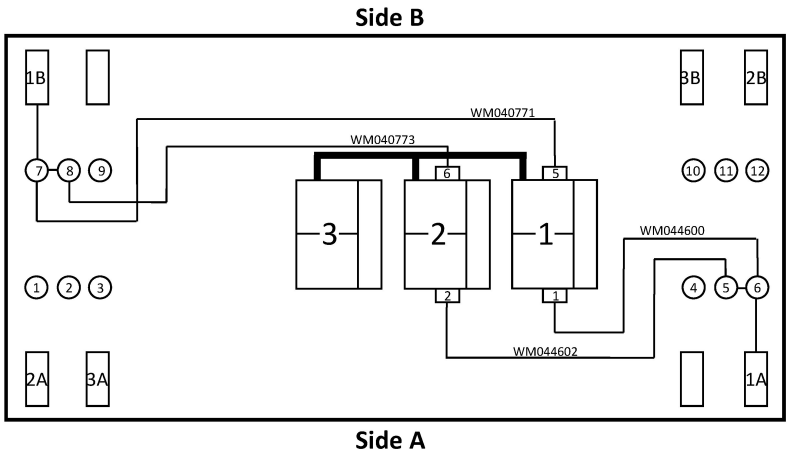
H(W/LU)11-31 H (SIM) SAT	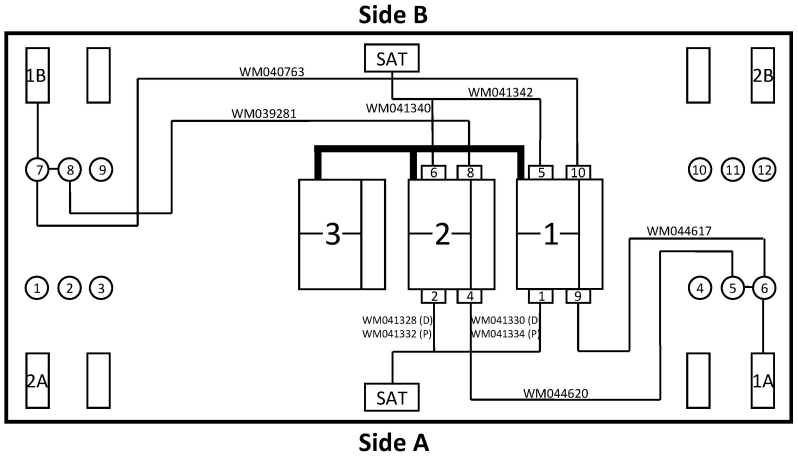

H(W/LU) 11-32 H (120/40 SIM)	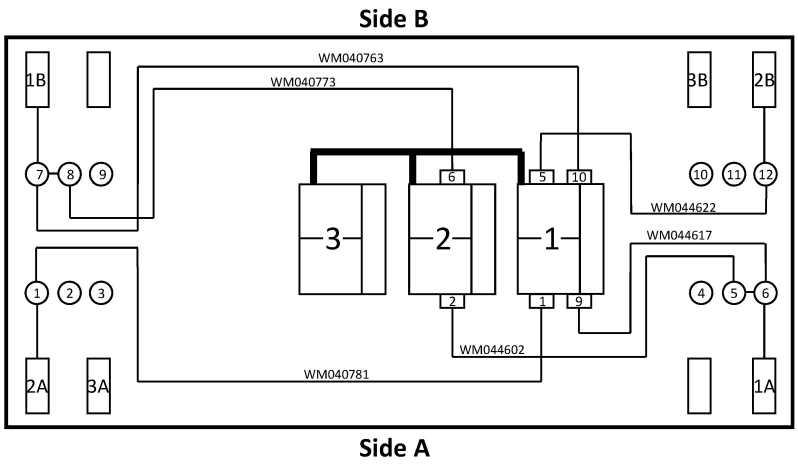
H(W/LU) 11-32 H (120/40) SAT H(W/LU) 22-32 H (120/40) SAT	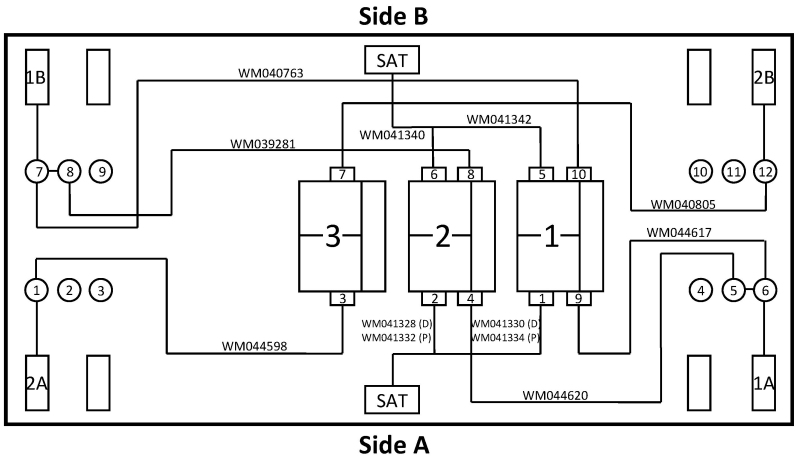
H(W/LU) 22-220	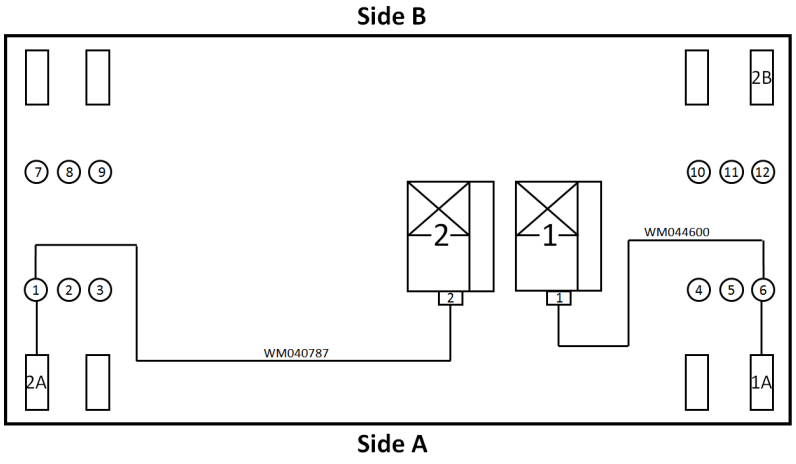

H(W/LU) 22-22	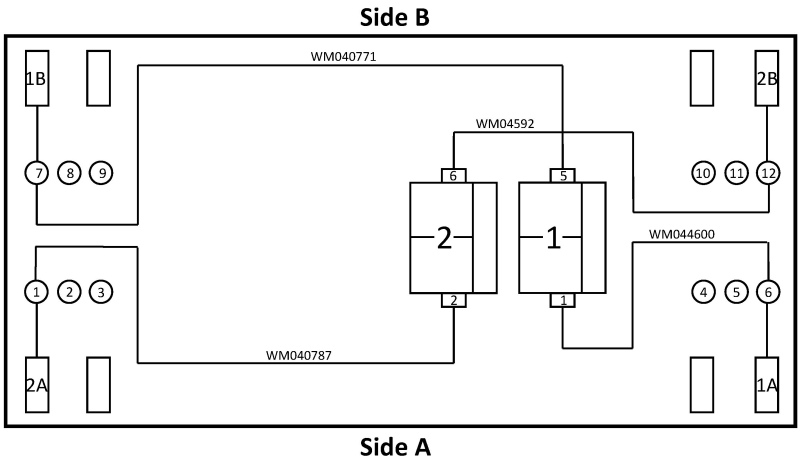
H(W/LU) 22-32 H H(W/LU) 34-32	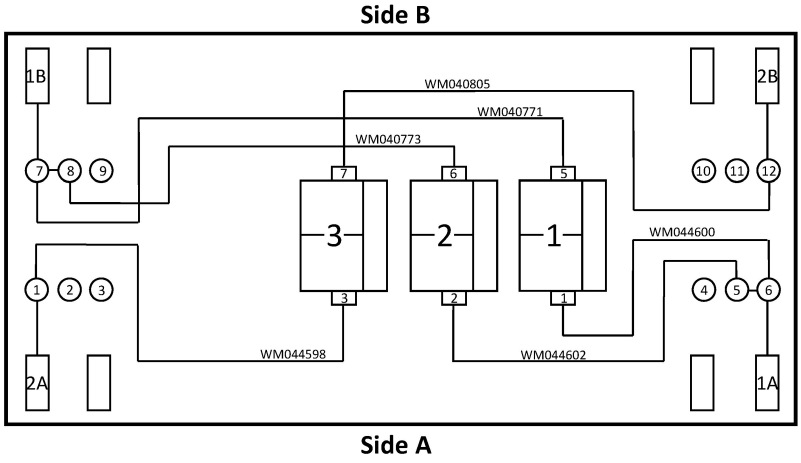
H(W/LU) 22-33 H H(W/LU) 34-33	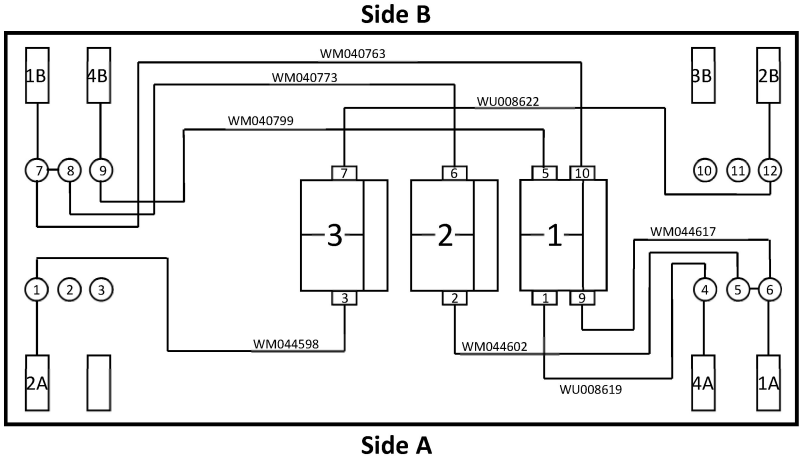

H(W/LU) 22-42 H (120/120) H(W/LU) 45-42	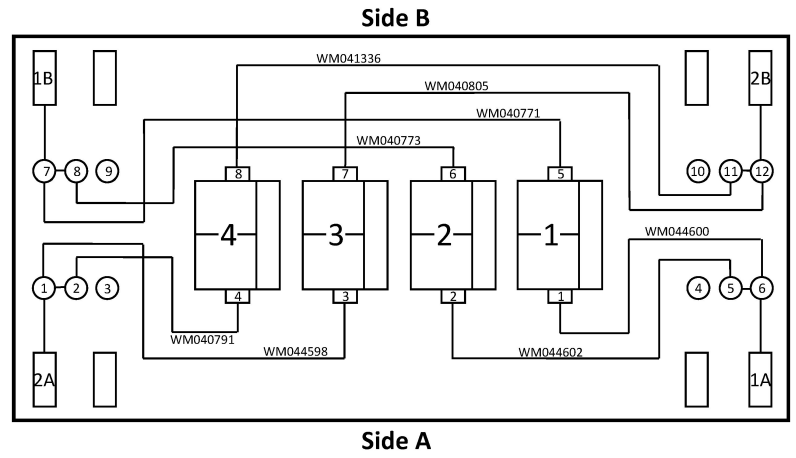
H(W/LU) 23-23	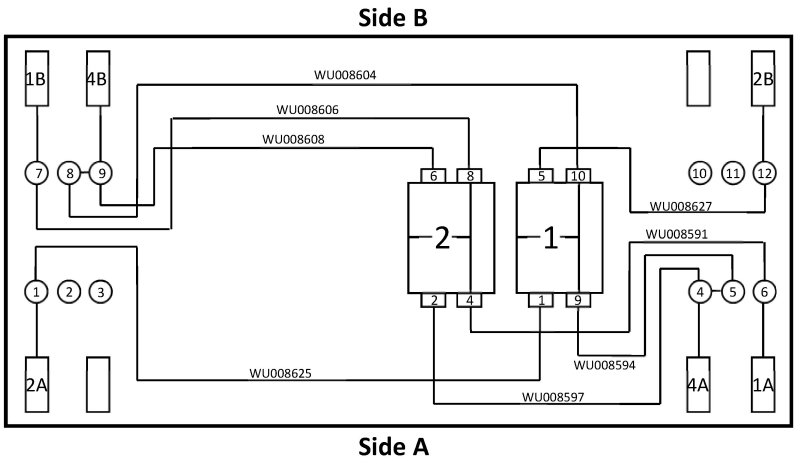
H(W/LU) 33-31	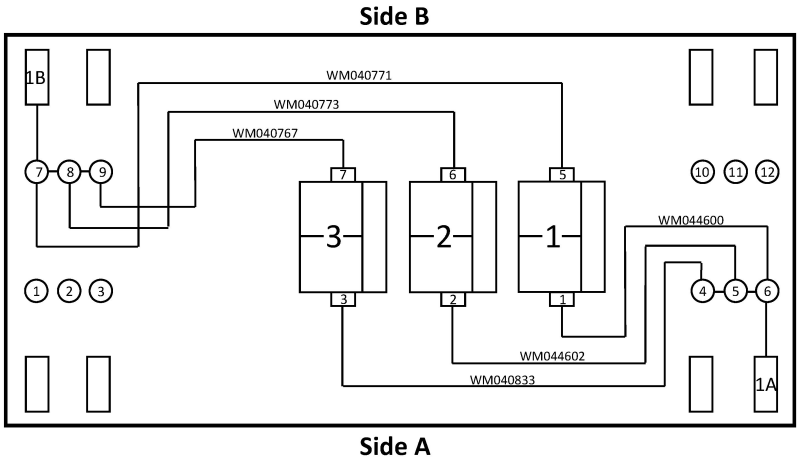

H(W/LU) 33-330	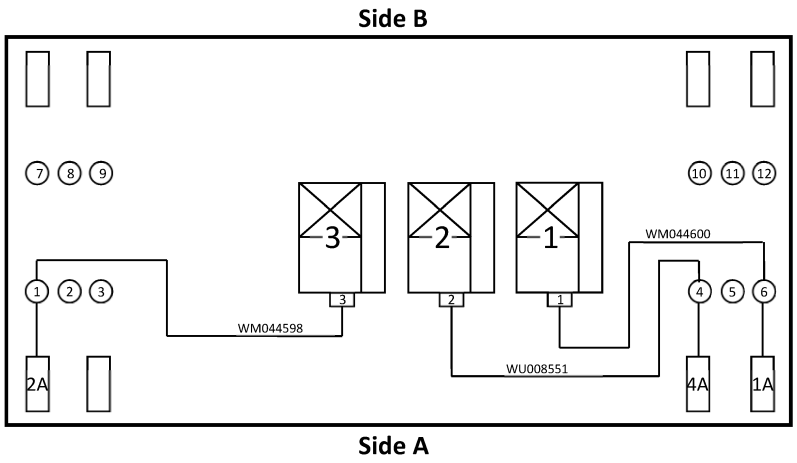
H(W/LU) 33-33 H(W/LU) 33-33 4U	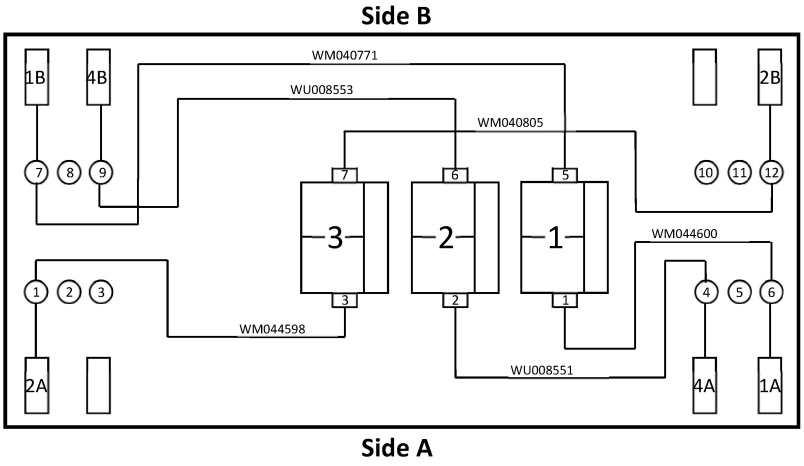
H(W/LU) 33-43 H H(W/LU) 45-43	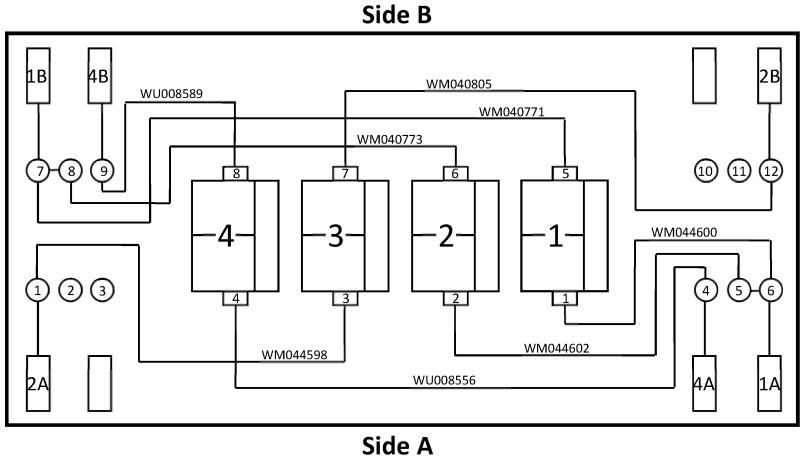

H(W/LU) 33-44 H H(W/LU) 45-44	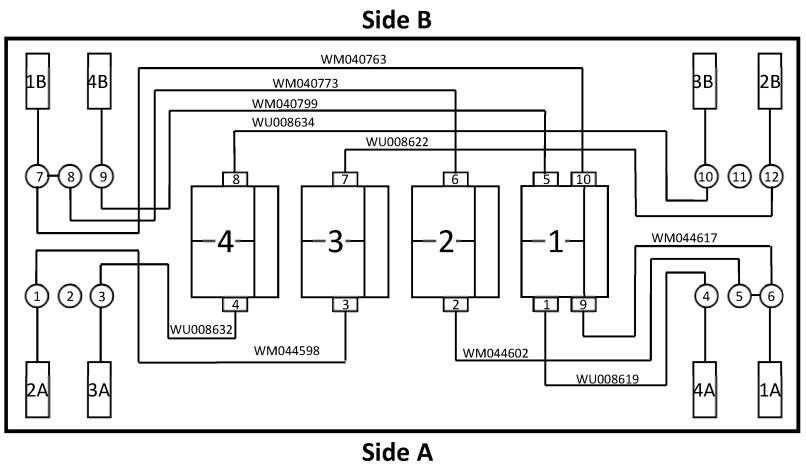
H(W/LU) 34-34	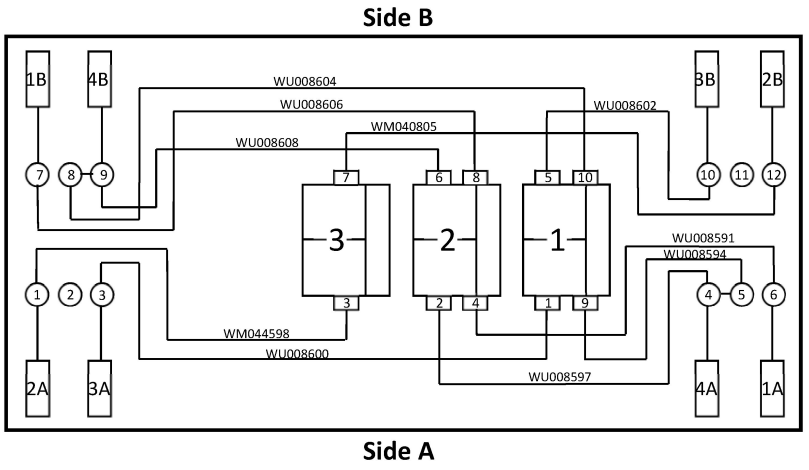
H(W/LU) 44-42	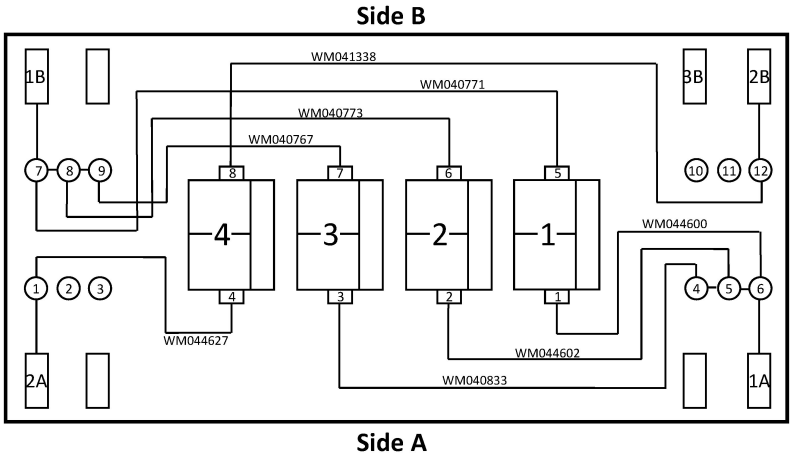

H(W/LU) 44-440	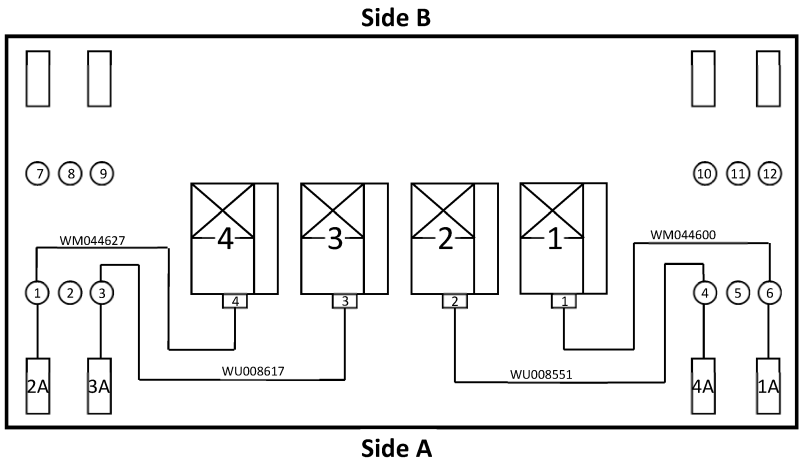
H(W/LU) 44-44 H(W/LU) 44-44 4U	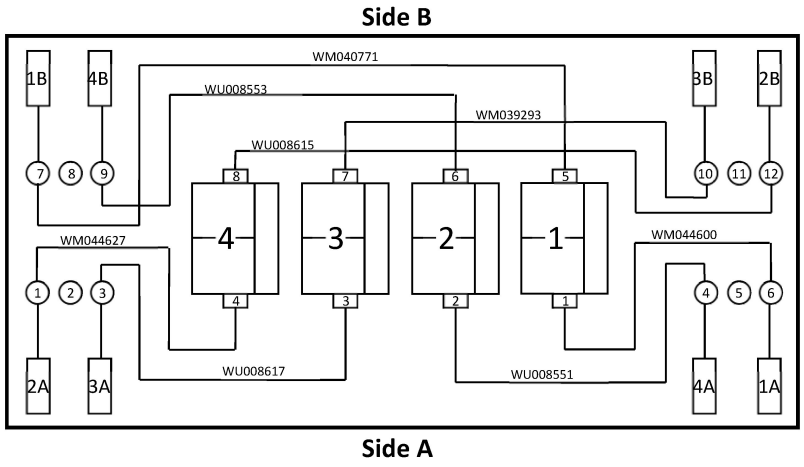
H(W/LU) 44-44 (Alternative configuration for BP)	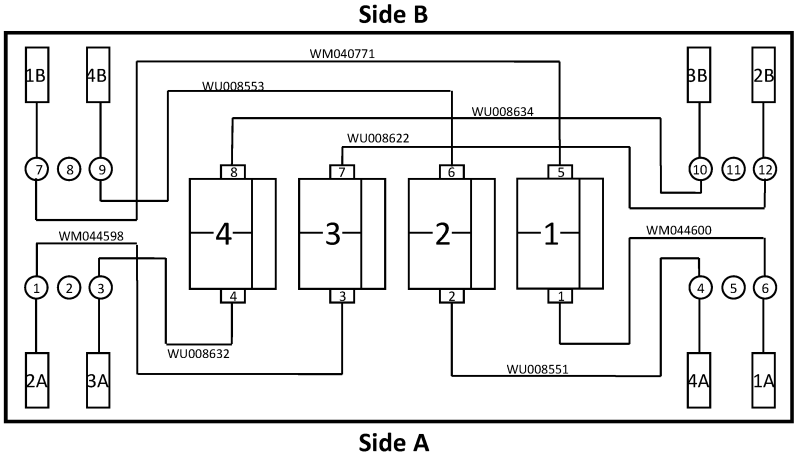

4.5 Helix 6000 - C-style

C(N/L) 11-11S	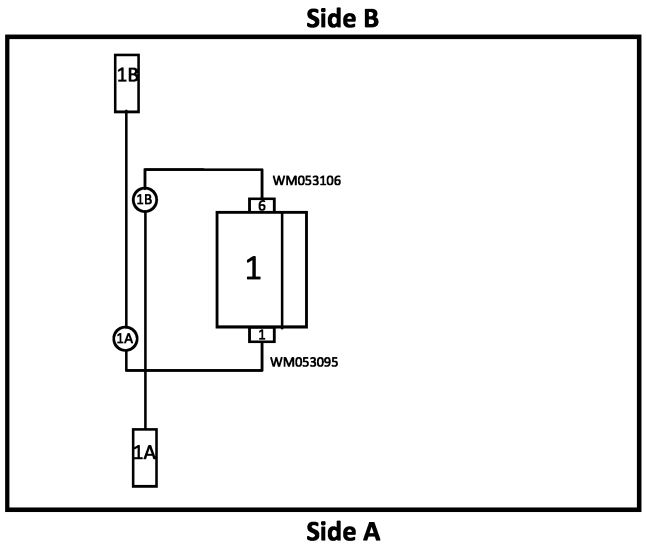
C(N/L) 11-110S side A	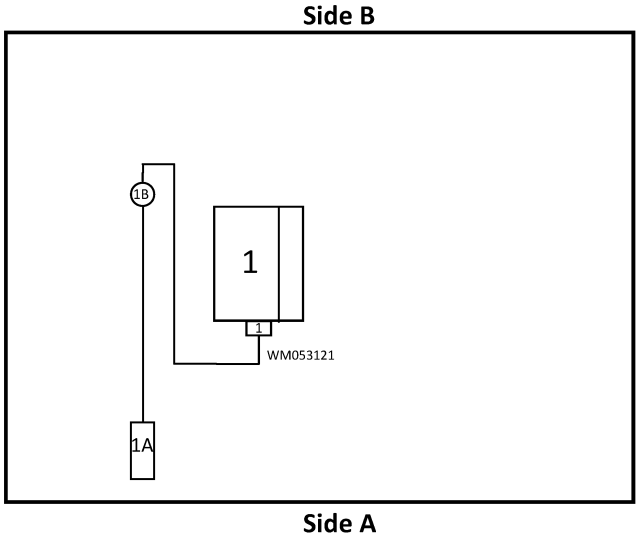
C(N/L) 22-22S	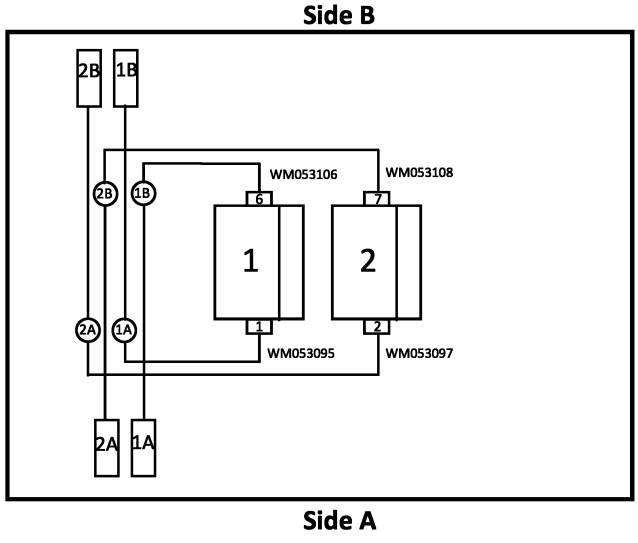

C(N/L) 22-220S side A	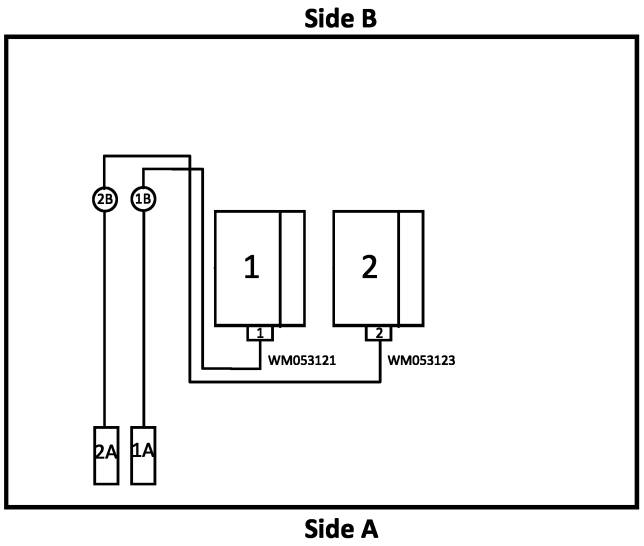
C(N/L) 33-33S	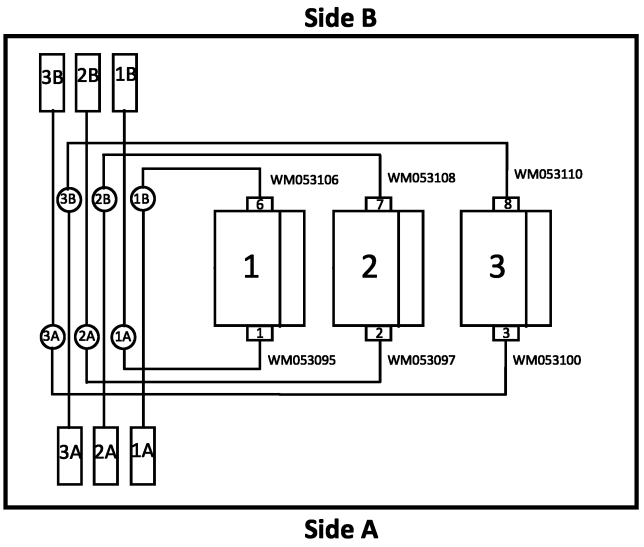
C(N/L) 33-330S side A	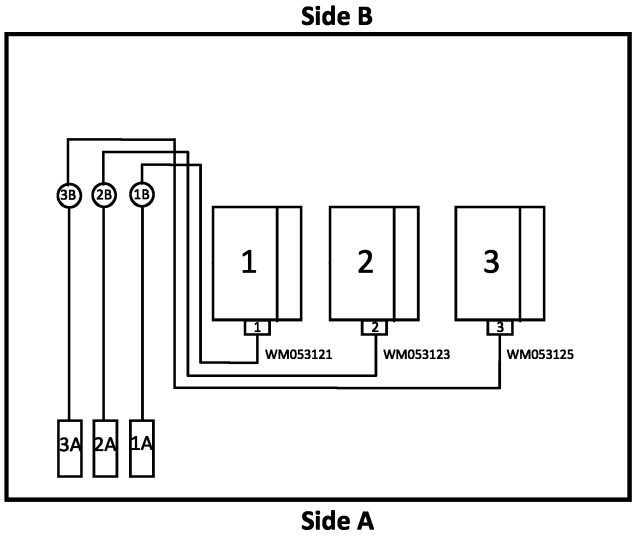

C(W/L) 44-44S	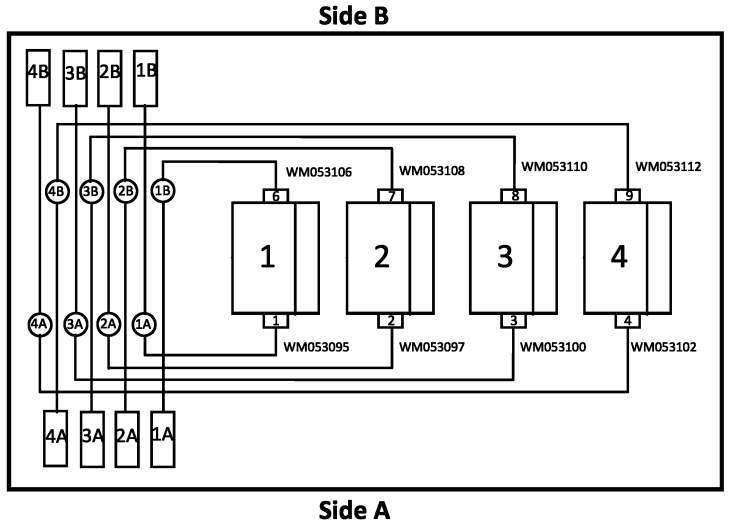
C(W/L) 44-440S side A	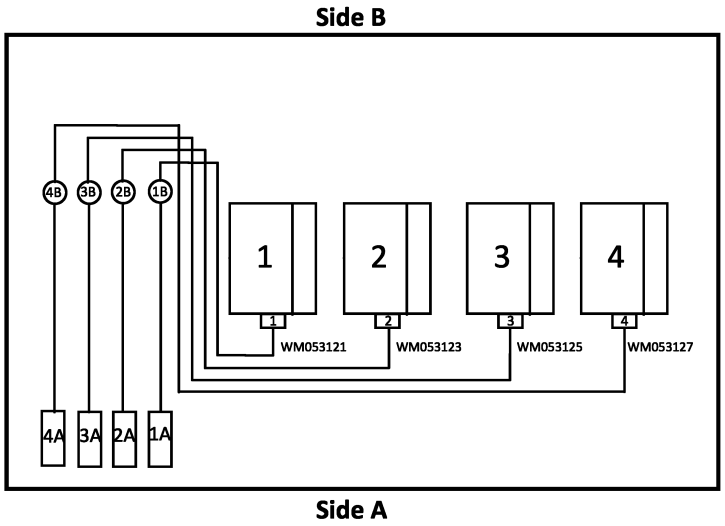
C(E/L) 55-55S	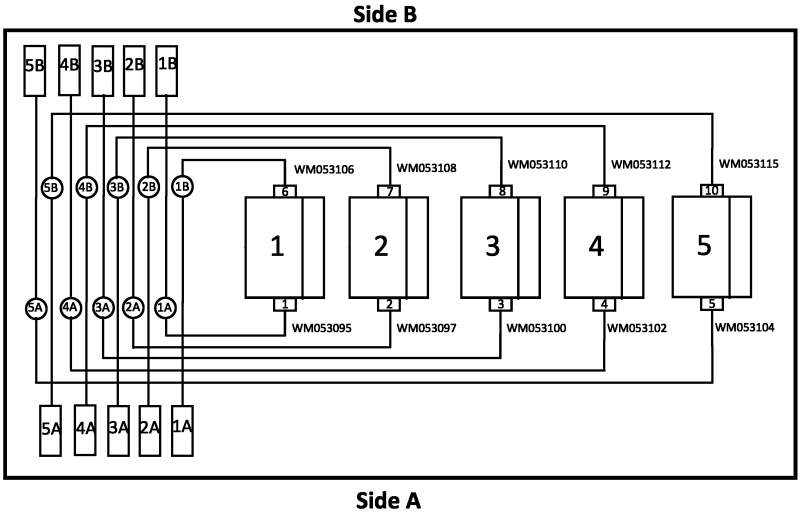

C(E/L) 55-550S side A	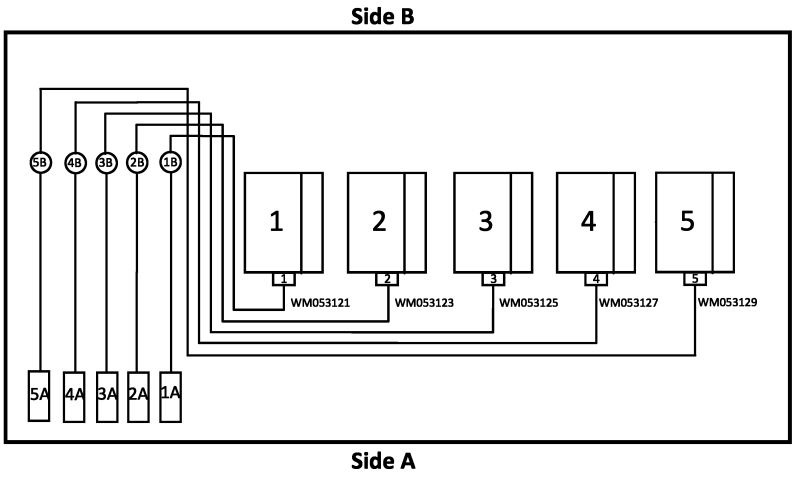

5 Electronic head

5.1 Frame module, EHPM

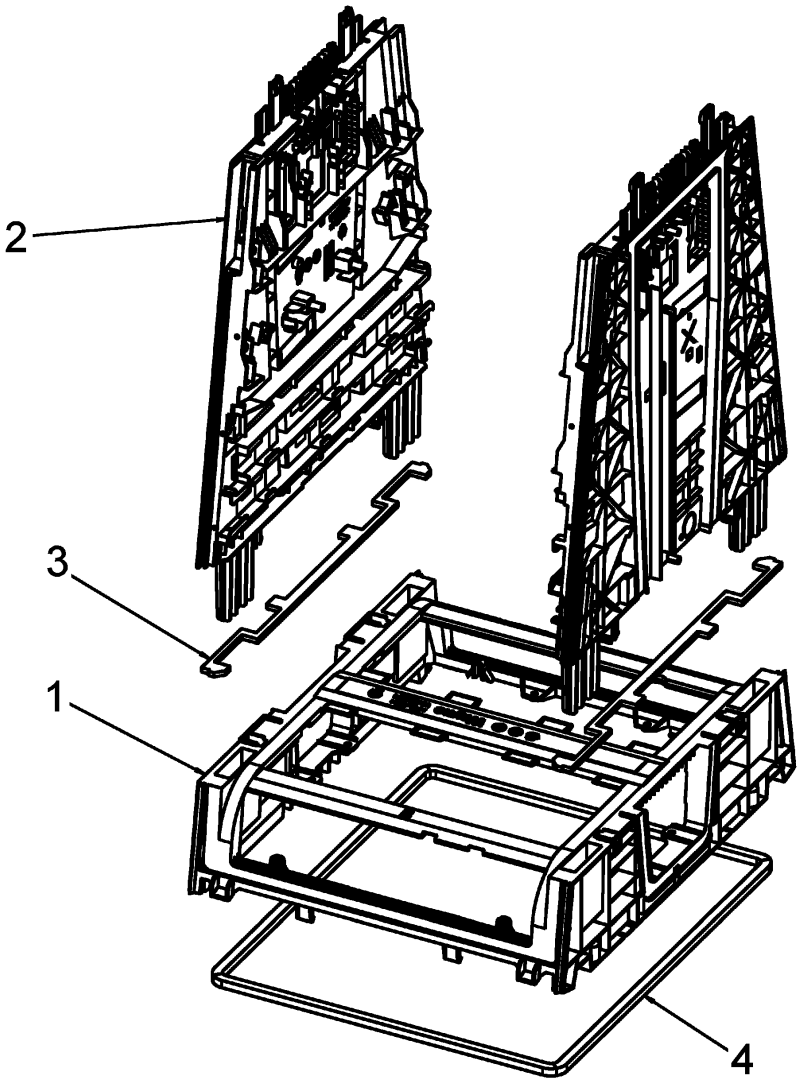

No.	Part Number	Description	Amount
1	WM039271	Support, box shape, LEE top + dispensed gasket	1
2	WM039277	Support, flat EHPM interior side	2
3	WM041393	Die cut gasket for interface LEE top/int. sde	2
4	WM045581	Die cut gasket for interface LEE top/bottom	1
---	WM048556	Gasket top panel to interior side	2
---	WM049146-0001	Gasket L=416, W=4, T=2	2

5.2 Frame EHPM, internal

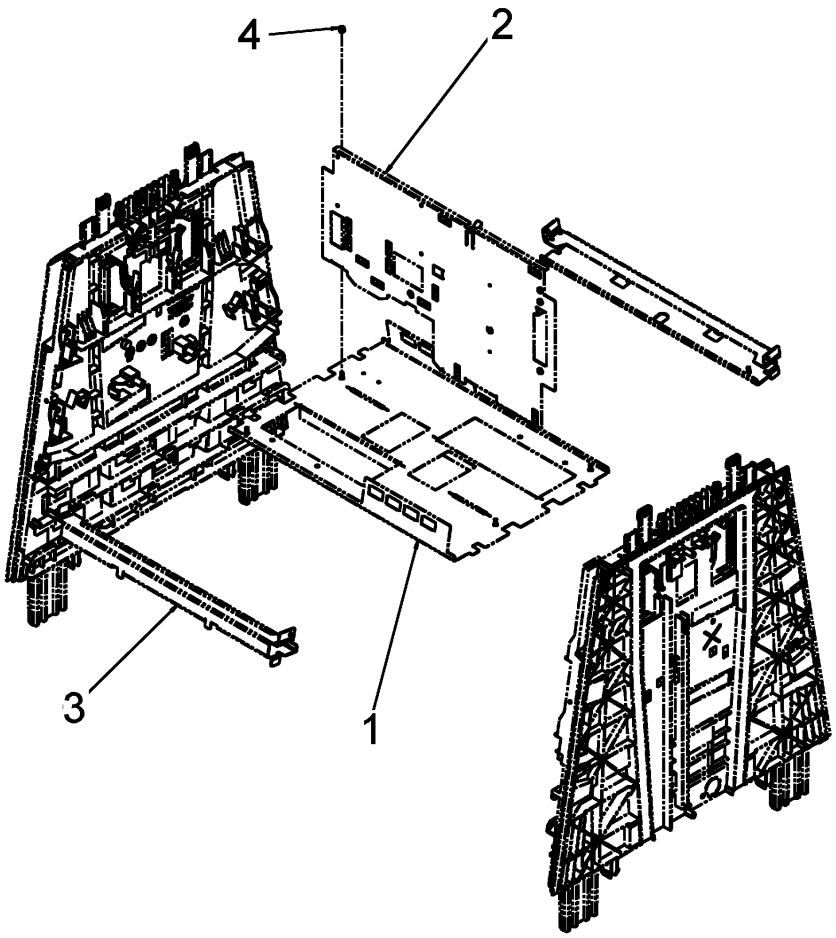

No.	Part Number	Description	Amount
1	WM038210	Support, U-shape, EH base plate	1
2	WM038213	Support, U-shape, EH base plate	1 or 2
3		**Support, U-shape, EHPM**	
	WM039459	- Support cross beam	2
	WM045678	- Support cross beam, lower posion	2
4	WB000229-0002	Lock nut, M4	4

5.3 Frame exterior stucture , EHPM

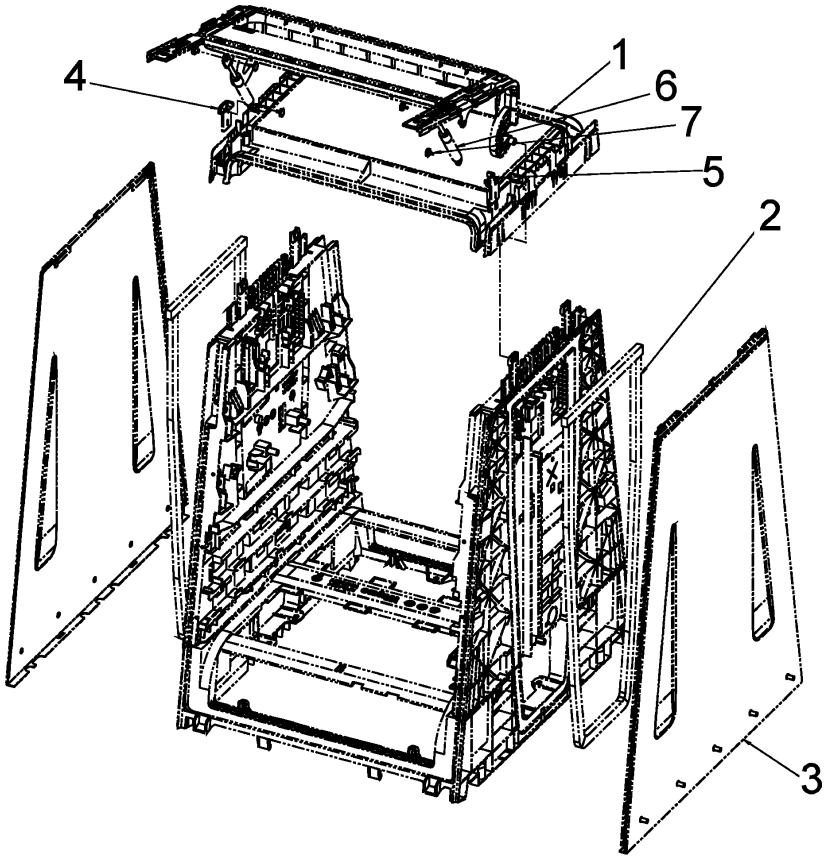

No.	Part Number	Description	Amount
1	WM039278	Top panel, EHPM top panel	1
2	WM041394	Sealing for cable channel	2
3		**Cover plate, side panel exterior** (grey A032)	
	WM046986-A032	- Narrow & wide	2
	WM049505-A032	- Small style	2
4	WM041995-0001	Support, L-shape, upper right	1
5	WM049223-0001	Support, flat left	2
6	WM043266-0001	Screw M3x8, large head with knurled grip	8
7	WB000229-0003	Lock nut, M6	10
8	WB000229-0003	Lock nut, M6	10

5.4 Frame Helix 1000

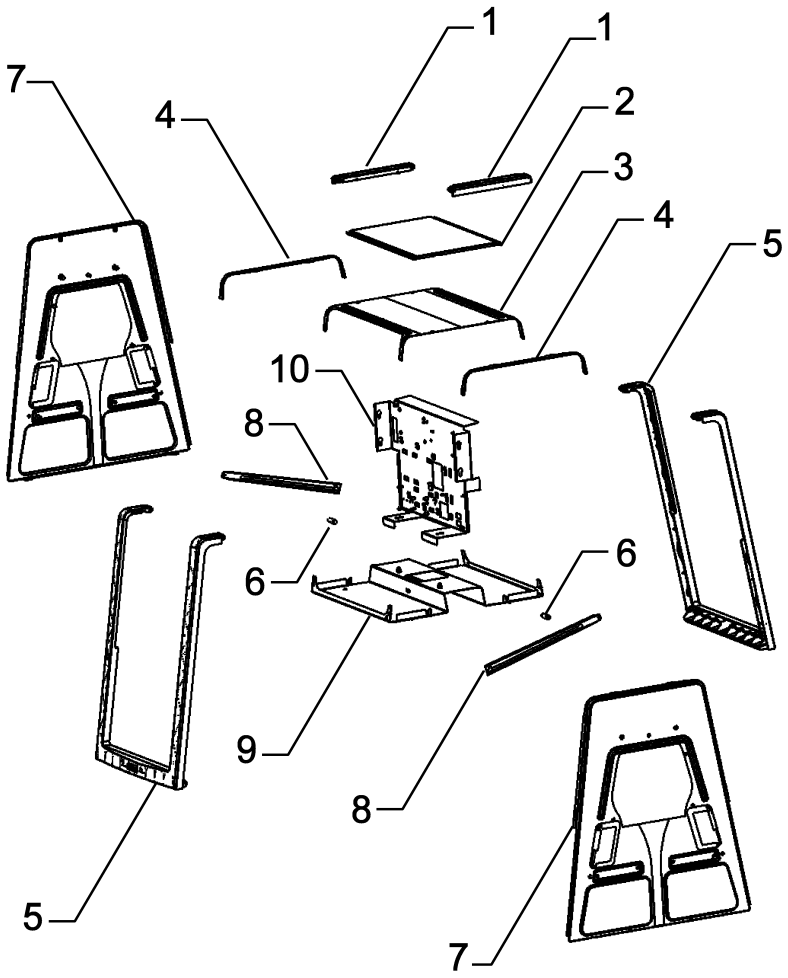

No.	Part Number	Description	Amount
1	WM052636	Hinge top decor	2
2	WM052637	Support, box shape roof	1
3	WM052638		1
4	WM053225	Gasket, L=492.5, H=22, W=3	2
5	WM052630	U-frame	2
6	WM050850	Hook rail	2
7	WM052632	Side panel	2
8	WM050844	Support, U-shape rail	2
9	WM052635	Panel bottom, electronic head	1
10	WM050463	Support, L-shape iGem	1

5.5 iGem board

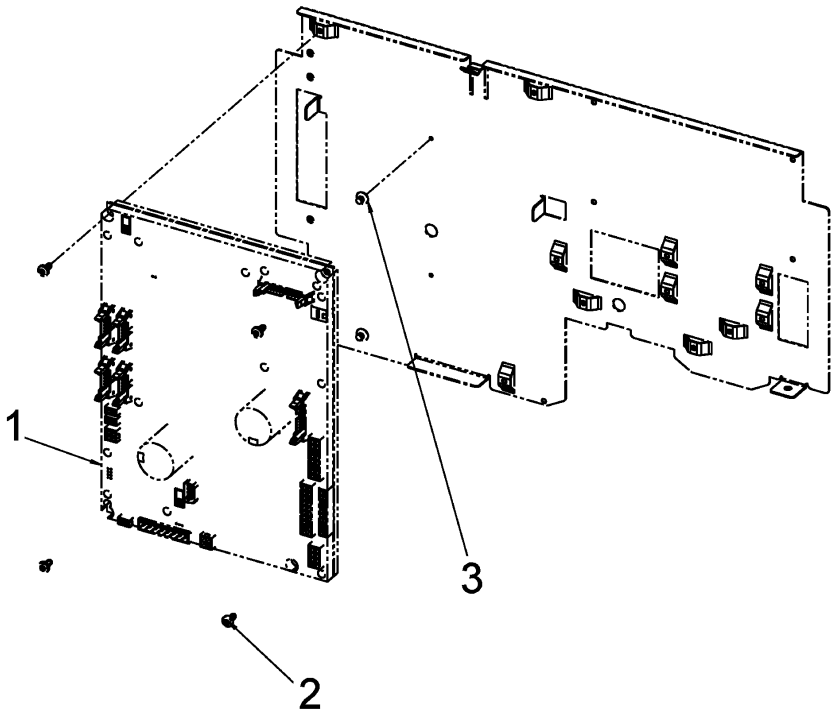

No.	Part Number	Description	Amount
1		**CPU board** (iGEM board)	
	WM001908-0003	- CPU board (US)	1
	WM001908-0002	- CPU board IEC (Low cost, LA)	1
	WM001908-0005	- CPU board IEC full with CAN (EMEA, LA, India)	1
2	WM045308-0002	Taptite Torx, pan head, M4x10 (Extra fasteners when 2 iGEM boards are used.)	4
3	WM047150-0001	Plastic fastener (l=4.8)	5
-	see page 37	Support, U-shape, EH base plate	

5.5.1 Sealing of programmed load switch

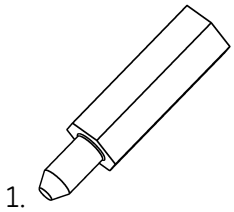
1.

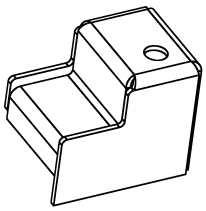
2.

No.	Part Number	Description	Amount
1	WM051057-0001	Spacer, blind, M4x20, self tapping male/female hexagonal	1
2	WM032350	Sealing program load switch iGem	1

5.6 Connection board, LEE

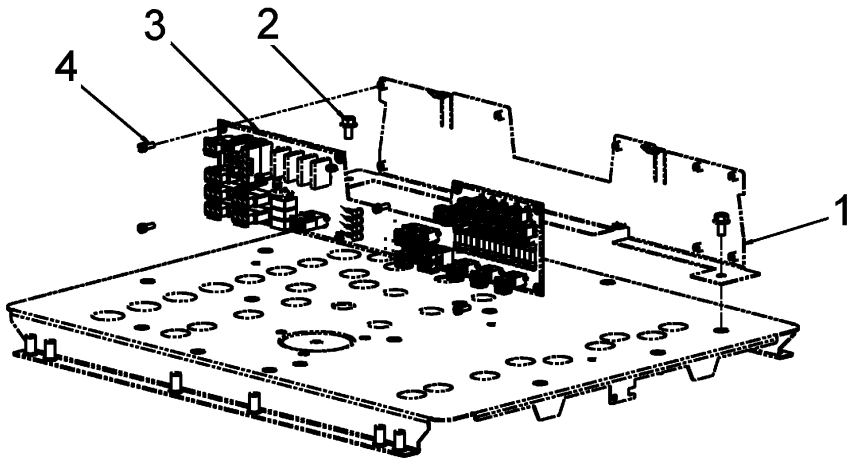

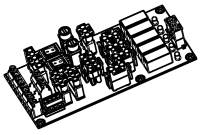
3b.

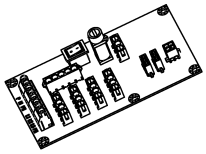
3c

4.

No.	Part Number	Description	Amount
1	WM040068	Support, L-shape, LEE component bracket	1
2	WM019873-0001	Screw, hex head, M6x12, with flange	2
3		**Connection board**	1
	WU005373	- Suction pump - UL	
	WU004203	- Dispenser pump - UL	
	WU004985	- Suction pump - IEC	
	WU004987-0001	- Dispenser pump - IEC	

No.	Part Number	Description	Amount
3b	WM053342	- Remote pump - IEC - Helix 1000	
3c	WM052339-0001	- Suction pump - IEC - Helix 1000	
4	WB000209-0009	Screw, hexagon socket CAP, M4x12	6
-	see page 141	Support, box shape LEE bottom	

5.7 ISB, module LEE

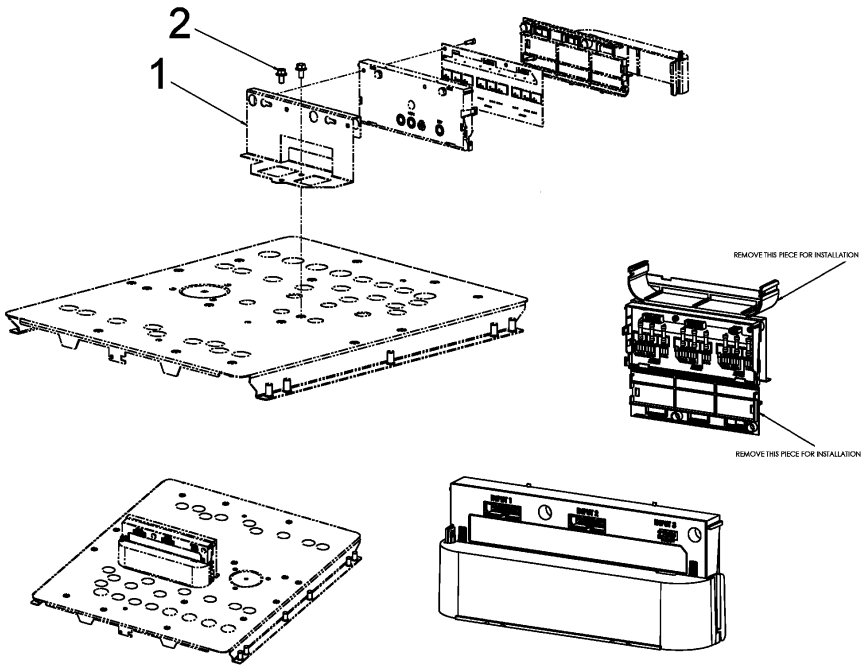

WARNING!

Electrical components under ATEX marked with (Ex) **must not** be repaired and should be replaced as complete spare part in case of operational functional failure.

No.	Part Number	Description	Amount
1	WM044632	Support, U-shape, component bracket (for ISB:s)	1
2	WM019873-0001	Screw, hex head, M6x12, with flange	2

No.	Part Number	Description	Amount
3		**Module, ISB**	
	WU005093-0001	- Three channel, UL/cUL	1 *1
	WU005093-0002	- One channel, UL/cUL	1 *1
	WM046690-0001	- Three channel, ATEX	1 *1
	WM046690-0002	- One channel, ATEX	1 *1
4	WB000209-0009	Screw, hexagon socket cap, M4x12	2 - 4

*1 Amount of channels needed is 1 channel/hyd + 1 channel for Nozzle + 1 channel if ATC.

5.8 Power supply module, LEE

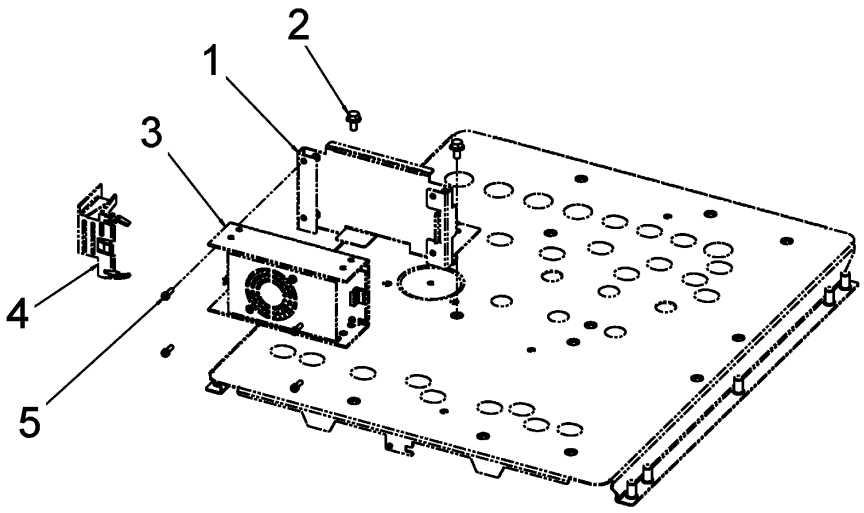

No.	Part Number	Description	Amount
1	WM039382	Support, L-shape, LEE extra power supply bracket	1
2	WM019873-0001	Screw, hex head, M6x12, with flange	2
3	WM027313-0001	Power supply, +24V, 150W, global	1 or 2
4	WM042620	Power supply cover	1 or 2
5	WB000209-0009	Screw, hexagon socket CAP, M4x12	2 or 4
-	see page 141	Support, box shape LEE bottom	

5.9 Bezel

5.9.1 LEE Bezel

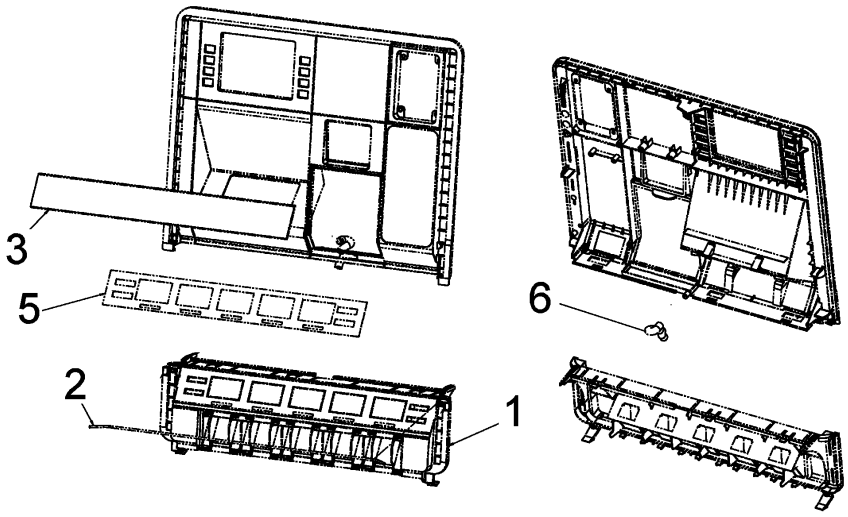

No.	Part Number	Description	Amount
1	WM051807	Bezel lower electronic enclosure	1
2	WM045302-0003	Gasket profile l=510	1
3	WM040630	Glass 415,3x56,2 t=4	1
4	---	---	---
5	WM040631	Adhesive tape, double-sided 416x59	1
6	WM044629	Moulded tube	1

5.9.2 EH Bezel module, EH Sales/volume

Sales volume

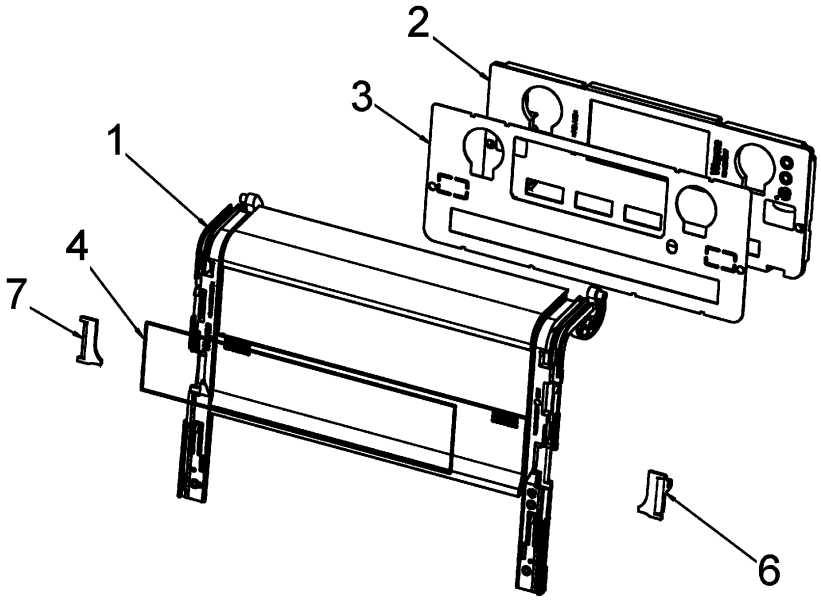

No.	Part Number	Description	Amount
1	WM052493-A032	EH Bezel P&V	1
2	WM048661	Display bracket	1
3	WM050945	Adhesive tape, double-sided VHB sheet S&V & UPD	1
4	WM040633	Glass 415,3x87,8 t=4	1
5	---	Instruction graphics (glass S&V)	1
6, 7	WM050969-0001	Support, Z-shape	1

Sales volume with UPD

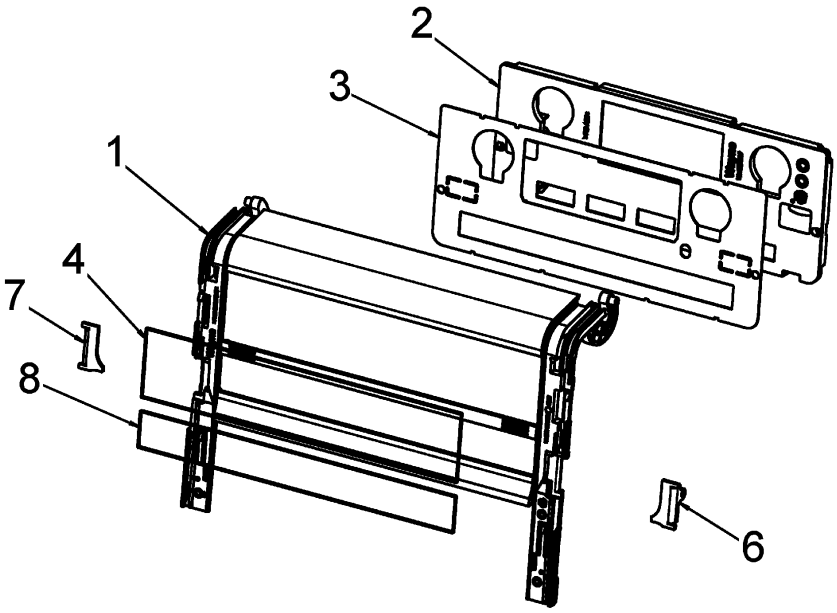

No.	Part Number	Description	Amount
1	WM052494-A032	EH Bezel P&V UPD	1
2	WM048661	Display bracket	1
3	WM050945	Adhesive tape, double-sided VHB sheet S&V & UPD	1
4	WM040633	Glass 415,3x87,8 t=4	1
5	---	Instruction graphics (glass S&V)	1
6, 7	WM050969-0001	Support, Z-shape	1
8	WM040638	Glass 416x47 t=4	1

Dual sales volume

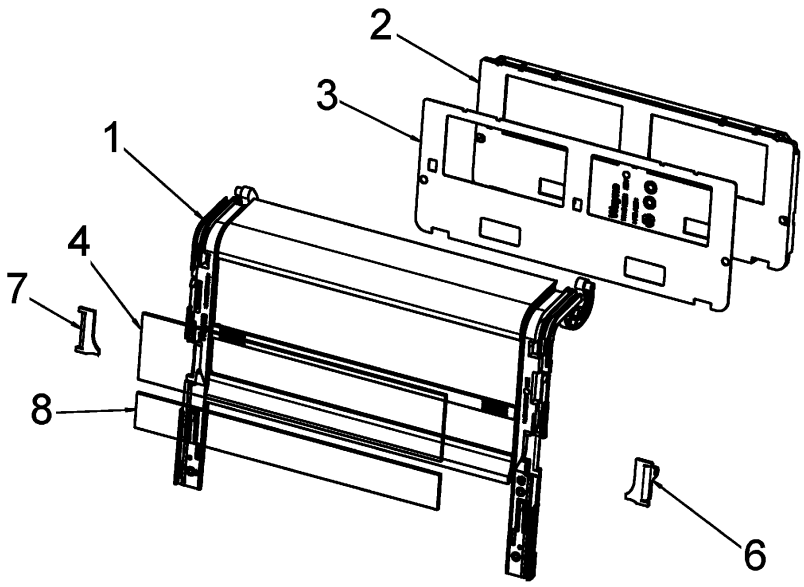

No.	Part Number	Description	Amount
1	WM044273-0002	EH Bezel P&V UPD	1
2	WM048662	Support, flat dual s/v display	1
3	WM050945	Adhesive tape, double-sided vhb sheet dual s/v displays	1
4	WM040633	Glass 415,3x87,8 t=4	1
5	---	Instruction graphics (glass S&V)	1
6, 7	WM050969-0001	Support, Z-shape	1
8	WM040638	Glass 416x47 t=4	1

VGA

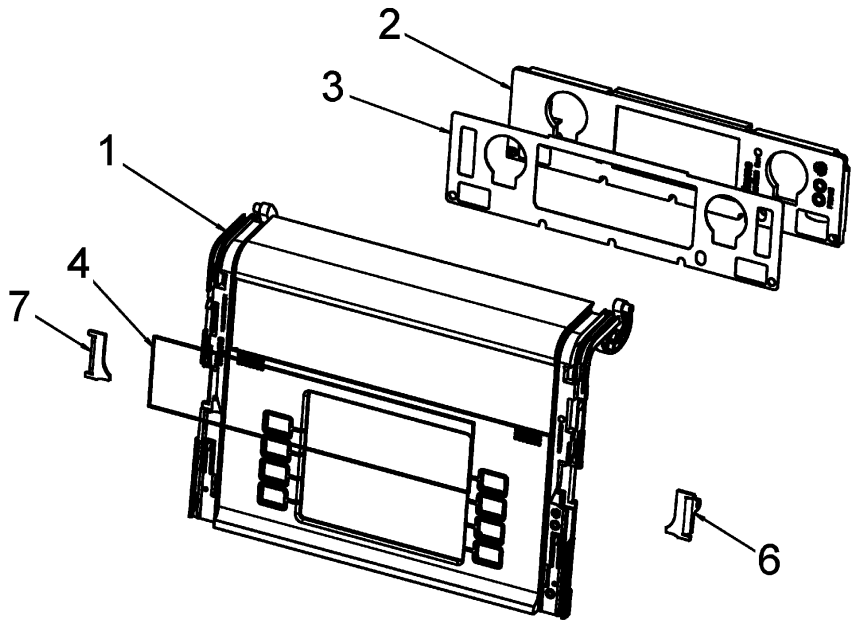

No.	Part Number	Description	Amount
1	WM052512-A032	Bezel 10.4" display	1
2	WM045285	Support, flat small bracket for s/v display only	1
3	WM050945	Adhesive tape, double-sided VHB sheet s&v 10,4	1
4	WM040633	Glass 415,3x87,8 t=4	1
5	---	Instruction graphics (glass S&V)	1
6, 7	WM050969-0001	Support, Z-shape	1

Sealing of EH bezel with S/V display only

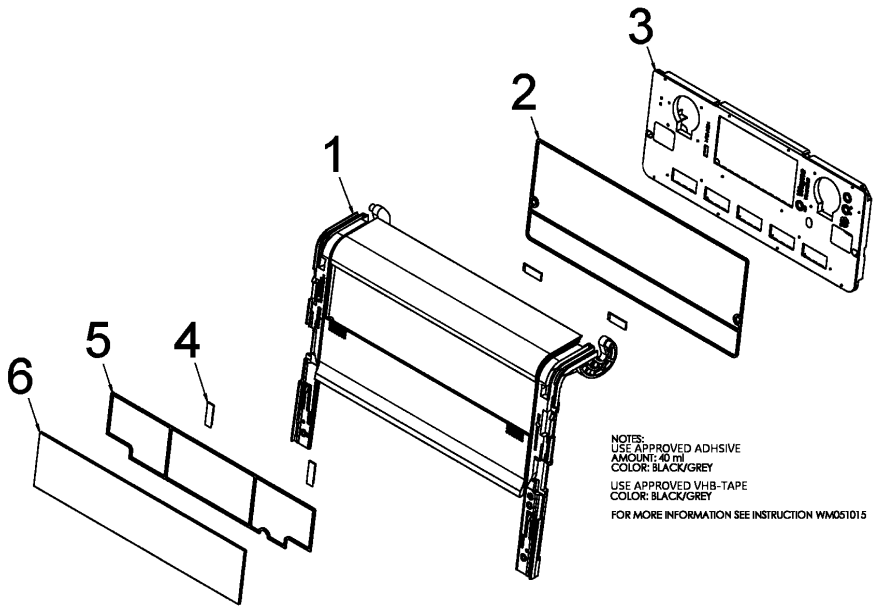

No.	Part Number	Description	Amount
1	WM044273-0001	U-shaped support	1
2, 5	WM051003	Adhesive, dow corning 3526 (alt. WM054487 dow corning 3636 or WM053800 Loctite 5607)	40ml
3	WM048661	Display bracket for SVD display, with/without UPD:s	1
4	WM050945	Small vhb sheet, t=1,6	4
6	WM040633	Glass, 415,5x88,5 t=4	1

Sealing of EH bezel with S/V display and UPD:s

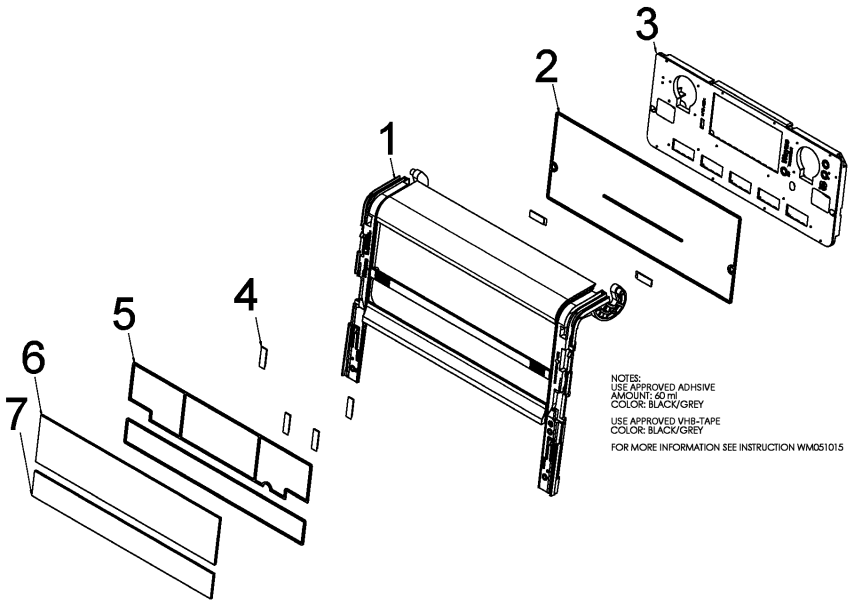

No.	Part Number	Description	Amount
1	WM044273-0002	U-shaped support	1
2, 5	WM051003	Adhesive, dow corning 3526 (alt. WM054487 dow corning 3636 or WM053800 Loctite 5607)	60ml
3	WM048661	Display bracket for SVD display, with/without UPD:s	1
4	WM050945	Small vhb sheet, t=1,6	6
6	WM040633	Glass, 415,5x88,5 t=4	1
7	WM040638	Glass, 415,3x46,3 t=4	1

Sealing of EH bezel with dual S/V only

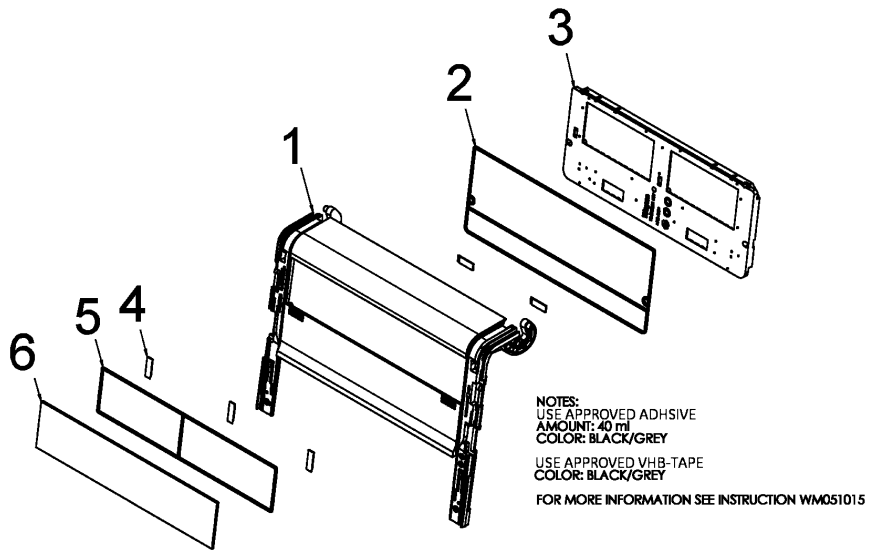

No.	Part Number	Description	Amount
1	WM044273-0001	U-shaped support	1
2, 5	WM051003	Adhesive, dow corning 3526 (alt. WM054487 dow corning 3636 or WM053800 Loctite 5607)	40ml
3	WM048662	Display bracket for dual S/V displays, with/without 2 UPD:s	1
4	WM050945	Small vhb sheet, t=1,6	5
---	WM008672	Tape (150mm)	1
6	WM040633	Glass, 415,5 x 88,5 t=4	1

Sealing of EH bezel with dual S/V and UPD:s

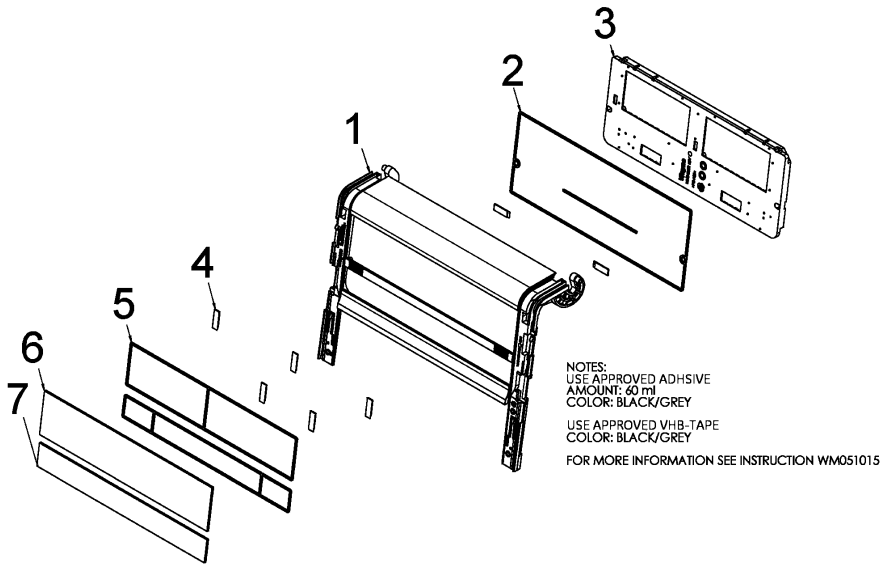

No.	Part Number	Description	Amount
1	WM044273-0002	U-shaped support	1
2, 5	WM051003	Adhesive, dow corning 3526 (alt. WM054487 dow corning 3636 or WM053800 Loctite 5607)	60ml
3	WM048662	Display bracket for dual S/V displays, with/without 2 UPD:s	1
4	WM050945	Small vhb sheet, t=1,6	7
---	WM008672	Tape (210mm)	1
6	WM040633	Glass, 415,5x88,5 t=4	1
7	WM040638	Glass, 415,3x46,3 t=4	1

Sealing of EH bezel with 10,4" media display

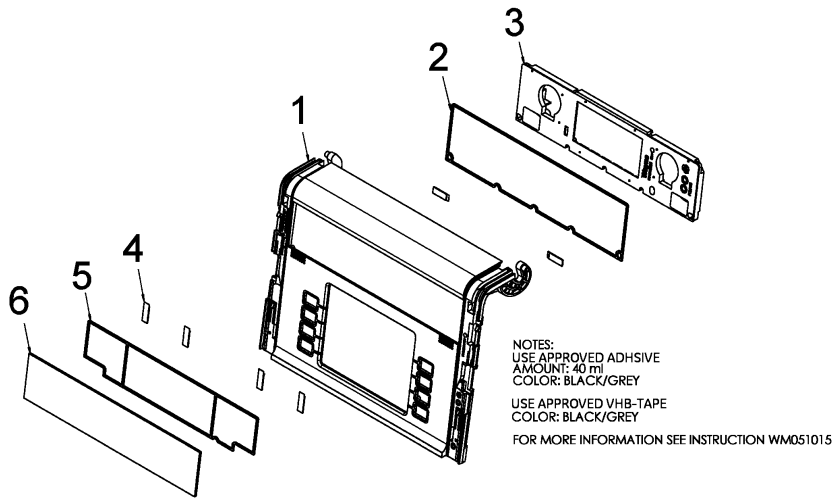

No.	Part Number	Description	Amount
1	WM045284	U-shaped support	1
2, 5	WM051003	Adhesive, dow corning 3526 (alt. WM054487 dow corning 3636 or WM053800 Loctite 5607)	40ml
3	WM045285	Display bracket for S/V display when 10.4" config.	1
4	WM050945	Small vhb sheet, t=1,6	6
---	WM008672	Tape (180mm)	1
6	WM040633	Glass, 415,5 x 88,5 t=4	1

Sealing of LEE bezel, payment

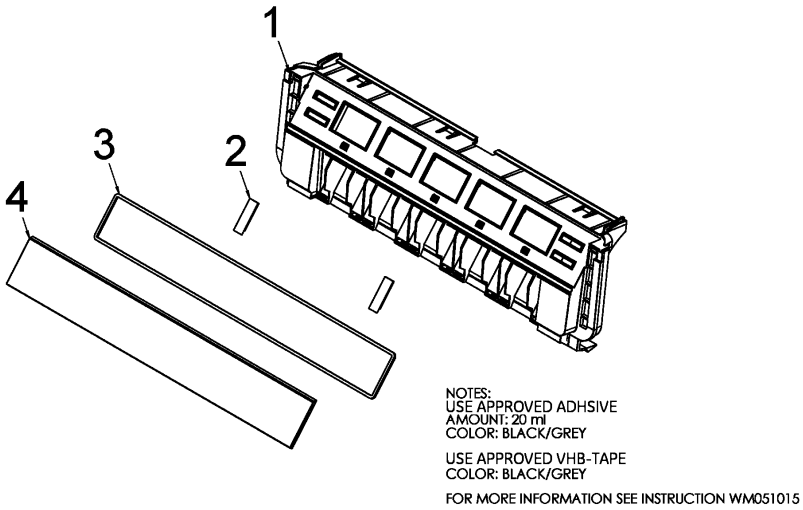

No.	Part Number	Description	Amount
1	WM051807	Bezel	1
2	WM050945	Small vhb sheet, t=1,6	2
---	WM008672	Tape (60mm)	1
3	WM051003	Adhesive, dow corning 3526 (alt. WM054487 dow corning 3636 or WM053800 Loctite 5607)	20ml
4	WM040630	Glass, 415,3x56,2 t=4	1

Sealing of LEE bezel, non-payment

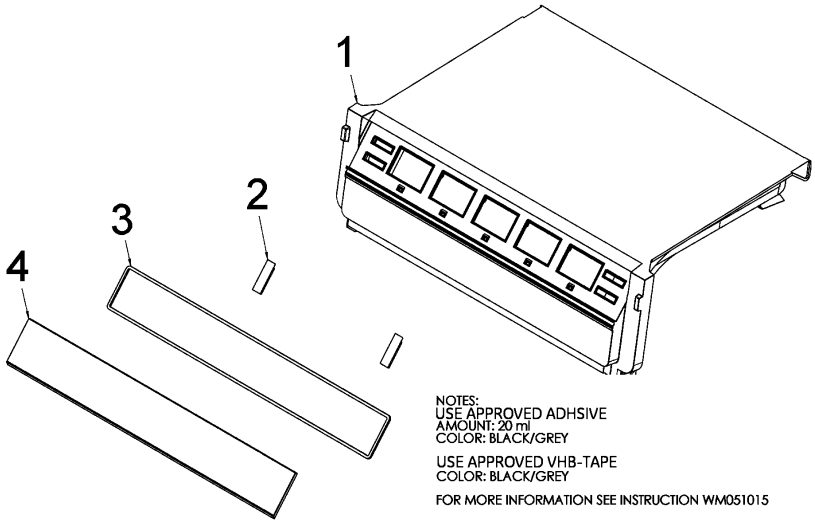

No.	Part Number	Description	Amount
1	WM052496-A032	Bezel	1
1	WM051302	Small vhb sheet, t=2,3	2
---	WM008672	Tape (60mm)	1
2	WM051003	Adhesive, dow corning 3526 (alt. WM054487 dow corning 3636 or WM053800 Loctite 5607)	20ml
3	WM040630	Glass, 415,3x56,2 t=4	1

5.9.3 PT Bezel for 5.7" display

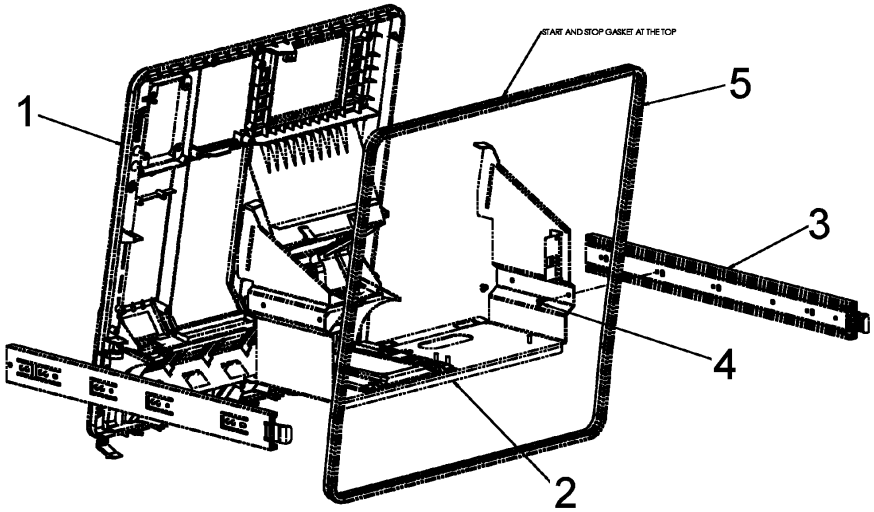

No.	Part Number	Description	Amount
1		**Front panel**	
	WM045608	- Payment terminal, small opening	1

No.	Part Number	Description	Amount
	WM045609	- Payment terminal, large opening	1
2	WM039389	Support, U-shape, bottom plate	1
3	WM045250	Rail complete assembly with snap, l=450 mm	2
4	WM028446-0001	Pop rivet, dome head, 4.0 diameter x 7, grip range 0-3,2	4
5	WM045016-0001	Gasket profile L=1207mm	4

5.9.4 Bezel Helix 1000

No.	Part Number	Description	Amount
1	WM052981-A032	Bezel Helix 1000	
2	WM052991-A032	Bezel single display preset	
3	WM052992-A032	Bezel single display preset, EMT	
4	WM052993-A032	Bezel single display preset, EMT, iButton	
5	WM052994-A032	Bezel single display preset, iButton	
6	WM052998-A032	Bezel single display preset, emergency	
7	WM052999-A032	Bezel single display preset, EMT, emergency	
8	WM053003-A032	Bezel sing disp preset, EMT, iButton, emergency	
9	WM053007-A032	Bezel single disp preset, iButton, emergency	
10	WM053008-A032	Bezel dual display preset	
11	WM053009-A032	Bezel dual display preset, EMT	
12	WM053010-A032	Bezel dual display preset, EMT, iButton	
13	WM053011-A032	Bezel dual display preset, iButton	
14	WM053012-A032	Bezel dual display preset, emergency	
15	WM053013-A032	Bezel dual display preset, EMT, emergency	
16	WM053014-A032	Bezel dual display preset, EMT, iButton, emergency	
17	WM053015-A032	Bezel dual display preset, iButton, emergency	
18	WM053016-A032	Bezel EMT	

5.10 Display module

5.10.1 Display module, softkeys and qVGA, Monochrome

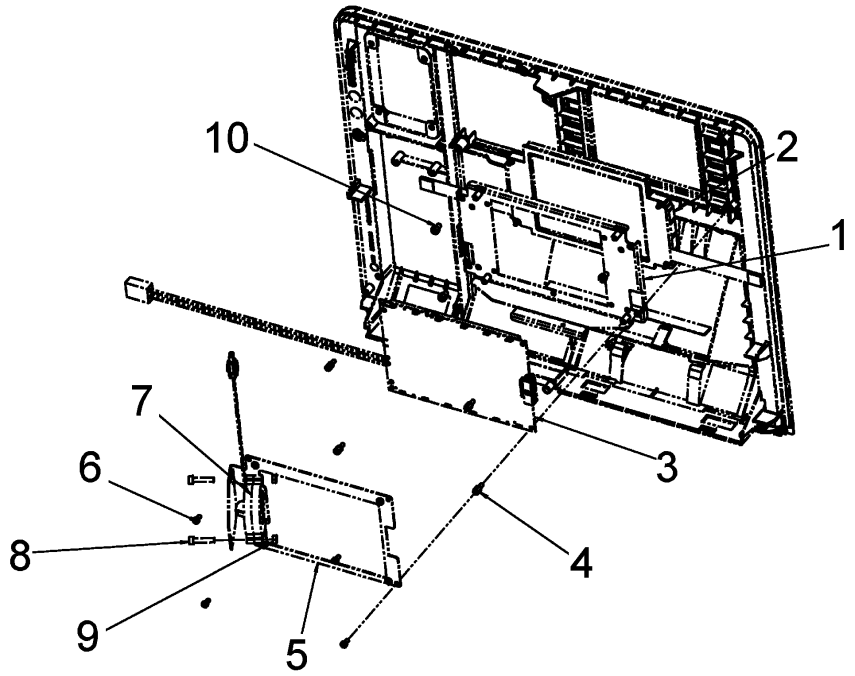

No.	Part Number	Description	Amount
1	WM039974	Support, soft key, monochrome display 5,7"	1
2	WM040524	Key pad, soft key 5.7"	1
	WM040572-0001	Cable multi 5x0.34 l=300 for Soft keys (UL)	1
3	WU004677	Display module 5,7" FSTN transflective, qVGA W/LED, 109mm	1
4	WB000330-0004	Spacer, blind, M3x7, male/female hexagonal	4
5	WM042349	Support fan	1
6	WB000334-0001	Screw, hexagon socket CAP, M3x6	4
7	WM042628	Fan blower, 51x15mm, 24V	1
8	WB000209-0002	Screw, hexagon socket cap, M4x20	2
9	WB000228-0002	Nut, M4	2
10	WB000209-0008	Screw, hexagon socket CAP, M4x14	4

5.10.2 Display module, softkeys and qVGA, Color

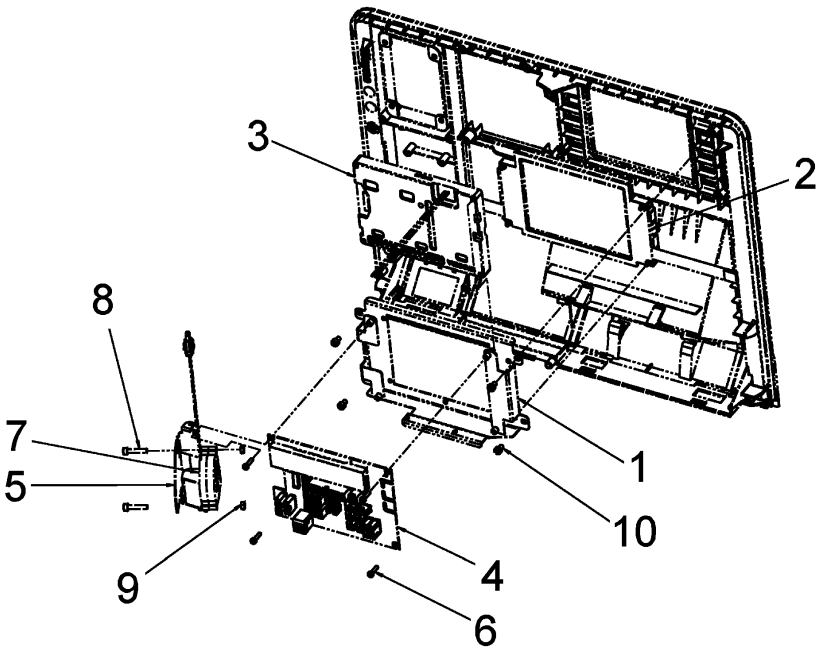

No.	Part Number	Description	Amount
1	WM040046	Support, soft key, Kyocera display 5,7"	1
2	WM040524	Key pad, soft key 5.7"	1
3	WM022940	Display, module 5,7" TFT qVGA	1
4	WM020648-0001	Board, iX TFT interface Kyocera qVGA 5.7"	1
5	WM042347	Support, fan	1
6	WB000334-0003	Screw, hexagon socket CAP, M3x12	4
7	WM042628	Fan blower, 51x15mm, 24V	1
8	WB000209-0002	Screw, hexagon socket cap, M4x20	2
9	WB000228-0002	Nut, M4	2
10	WB000209-0008	Screw, hexagon socket CAP, M4x14	4

5.10.3 Soft key for 10.4" display with boards

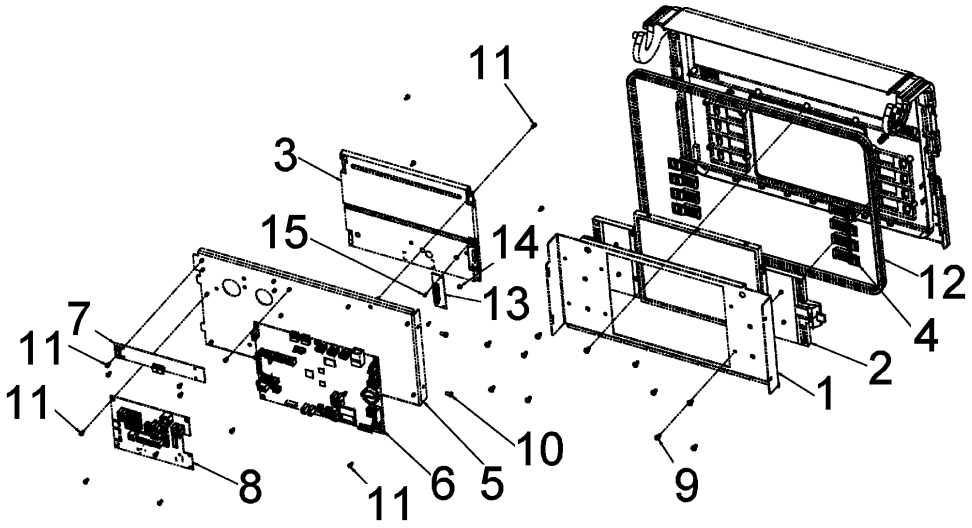

No.	Part Number	Description	Amount
1	WM045539	Support soft key, 10.4" display	1
2	WM045513	Key pad, soft key 10.4"	1
3	WU002840	Display, module, 10,4" color TFT, VGA, LED backlight	1
4	WM047255-A040	Button, soft key, 10.4" display, silver A040	8
5	WM045536	Support, flat, 10.4" display, boards	1
6		**CPU board iX-R2**	1
	WU007284-0002	- 806MHz, programmed (UL)	
	WM044945	- Unsigned + MAC address (Media)	
	WM044946	- Production signed + MAC address (iX Payment)	
7	WU005427-0001	Board quad channel LED driver	1
8	WM020648-0004	Board iX TFT interface Sharp US VGA 10.4 CFL	1
9	WM045329-0001	Screw, hexagon socket cap, M4x8, low head	
10	WM045228-0001	Screw, hexagon socket cap, M4x8, low head	2
11	WB000334-0001	Screw, hexagon socket cap, M3x6	14
12	WM045016-0003	Gasket profile l=1465	1
13	WU002299-0001	Board adaptor, VGA, NEC, rear mount	1
14	WM038067	Spacer, thru-hole id=3,2, od=6, t=2	2

No.	Part Number	Description	Amount
15	WB000691-0003	Self tapping screw, POZ, pan head, F (B) ST2,2x6,5	2
16	WM042628	Fan blower, 51x15mm, 24V	1
17	WB000209-0002	Screw, hexagon socket cap, M4x20	2
18	WB000228-0002	Nut, M4	2

5.11 iX board

5.11.1 iX board (5.7" display monochrome)

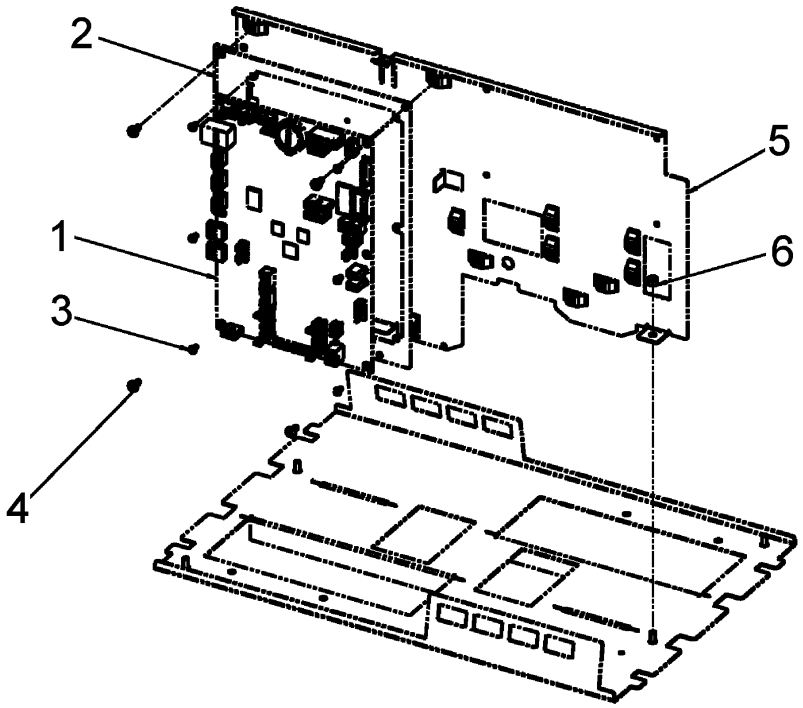

No.	Part Number	Description	Amount
1		**CPU board iX-R2**	
	WU007284-0001	- Programmed (624MHz)	1
	WU003083-0001	- With MAC address (624MHz)	1
2	WM045709	Support, flat R2 board	1
3	WB000663-0001	Screw, taptite, M3x6 (MRX-TT)	6
4	WM045308-0002	Taptite screw, Torx, pan head, M4x10	4
5	WM038213	Support, flat, for components	1
6	WB000229-0002	Lock nut, M4	1

No.	Part Number	Description	Amount
-	see page 37	Support, U-shape, EH base plate	

5.11.2 iX board (5.7" display color)

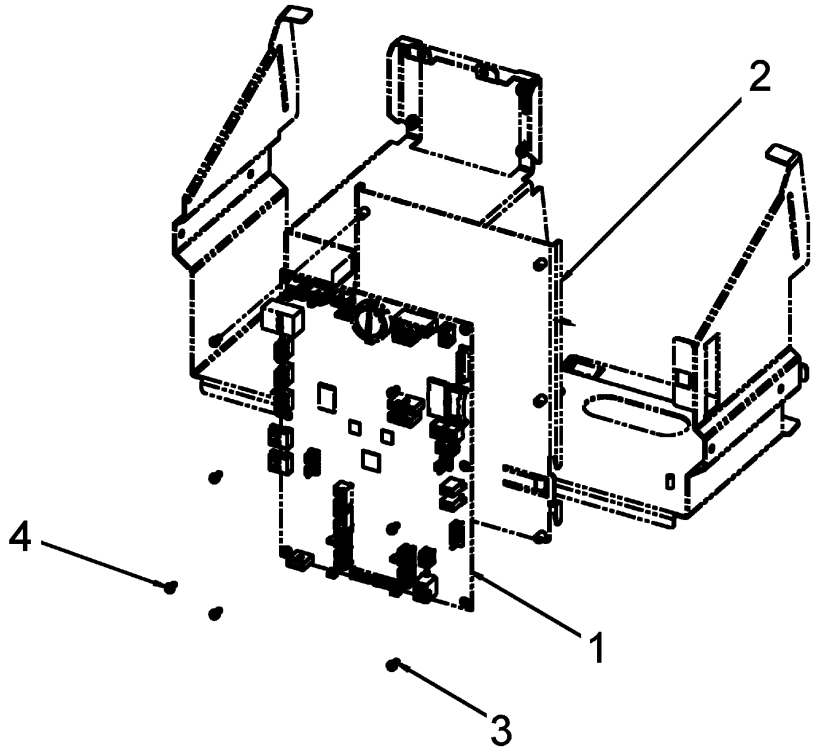

No.	Part Number	Description	Amount
1		**CPU board iX-R2**	1
	WU007284-0002	- Programmed (806MHz)	
	WU003083-0002	- With MAC address (806MHZ)	
2	WM043442	Support, flat board bezel	1
3	WB000334-0001	Taptite screw, cross recessed, pan head, M3x6	6
4	WB000663-0001	Screw, taptite, M3x6 (MRX-TT)	1
-	see page 56	Support, U-shape, bottom plate	
-	see page 68	Support, L-shape, card reader	

5.12 Nozzle converter

Cables see page 233.

1. 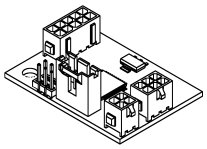			

No.	Part Number	Description	Amount
1	WU006752-0001	Nozzle converter board	1

5.13 Keypad

5.13.1 SPM keypad

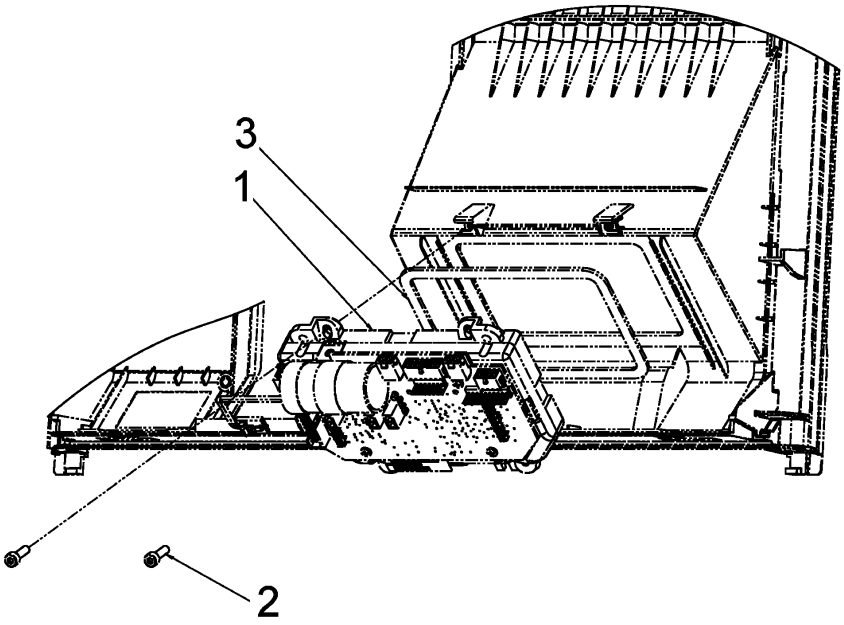

No.	Part Number	Description	Amount
1		**Key pad, assy, secure payment module**	
	WU000436-0005	- Canada low profile	1
	WU000436-0006	- US, low profile	1
	WU000436-0007	- UK, low profile	1
	WU000436-0008	- Gen, low profile	1
2	WB000209-0008	Screw, hexagon socket CAP, M4x14	2
3	WM042603	Gasket, SPM keypad	1

5.13.2 Preset keypad

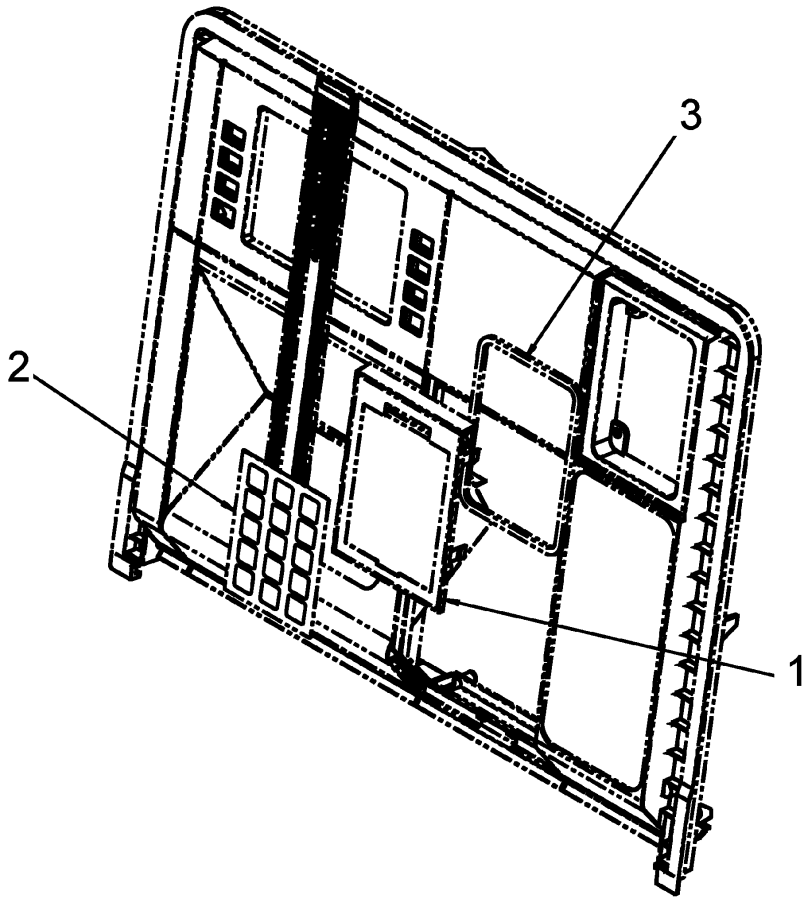

Cables, see page 235.

No.	Part Number	Description	Amount
1	WM039320-0001	Panel keypad back support	1 - 2
2	WU007271-0001	Preset, 3x5, no overlay, 70x92mm	1 - 2
3	WM045577	Gasket insert panel	1 - 2

5.13.3 Hypercom K1200+H2210 keypad

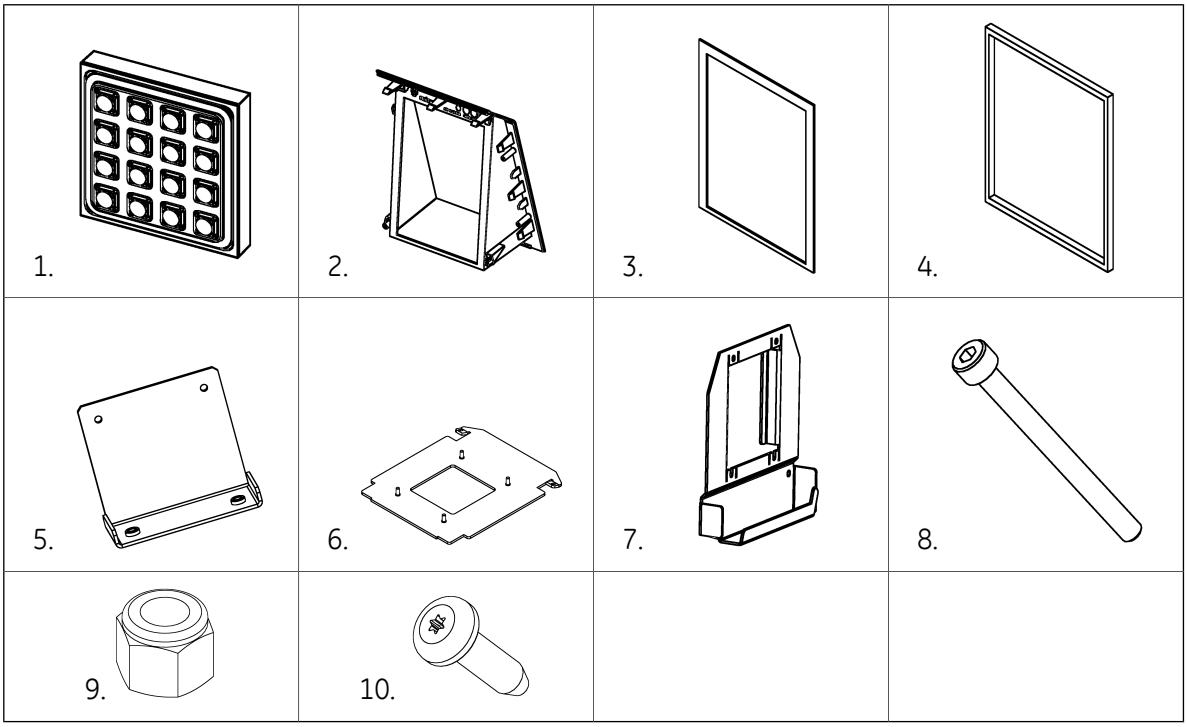

No.	Part Number	Description	Amount
1	WM022921-0003	Key pad Hypercom K1200, OK/Q8 SE	
2	WM052607-A032	Panel, inset, key pads	1
3	WM051072	Gasket, pin pad adapter, small PT	1
4	WM051065	Gasket, H=220, W=178, T=8	1
5	WM051875	Support, L-shape	1
6	WM052472	Support, flat, key pad, Hypercom K1200	1
7	WM052474	Support, Hypercom K1200	1
8	WB000209-0008	Screw, hexagon socket CAP, M4x14	4
9	WB000229-0002	Lock nut, M4	4
10	WM054537-0001	Self tapping screw for plastic	2

5.13.4 Hypercom, Artema

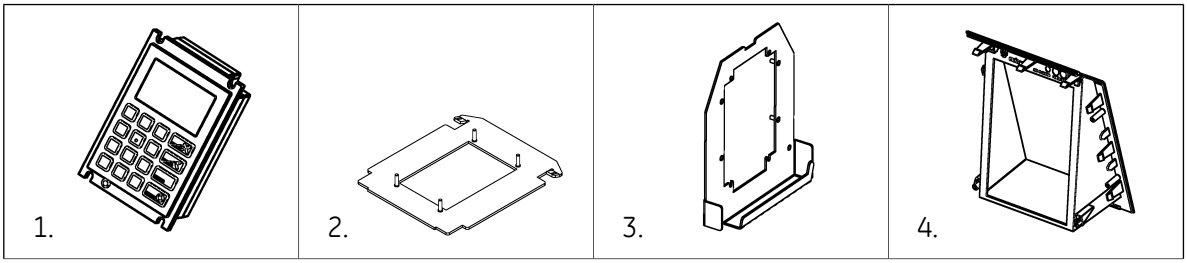

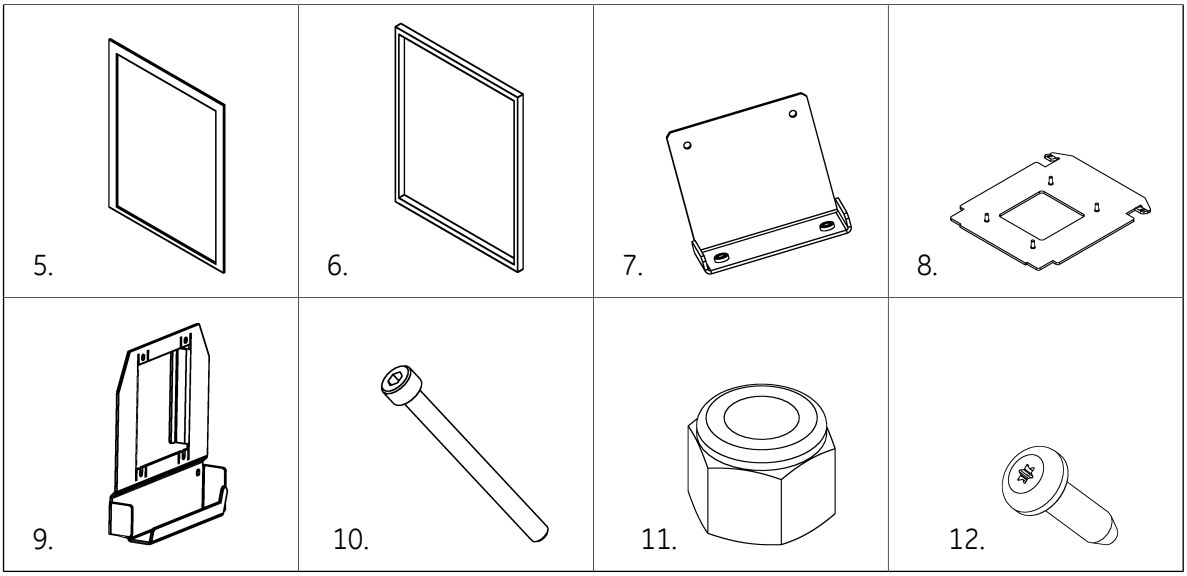

No.	Part Number	Description	Amount
1	WM041174	Key pad, Hypercom Artema	1
2	WM052429	Support, flat, Hypercom Artema	1
3	WM052456	Support, Hypercom Artema	1
4	WM052607-A032	Panel, inset, key pads	1
5	WM051072	Gasket, pin pad adapter, small PT	1
6	WM051065	Gasket, H=220, W=178, T=8	1
7	WM051875	Support, L-shape	1
8	WM052472	Support, flat, key pad, Hypercom K1200	1
9	WM052474	Support, Hypercom K1200	1
10	WB000209-0008	Screw, hexagon socket CAP, M4x14	4
11	WB000229-0002	Lock nut, M4	4
12	WM054537-0001	Self tapping screw for plastic	2

5.13.5 Ingenico iUP/iUC250, Card reader and Key pad

See page 73

5.13.6 Verifone UX100

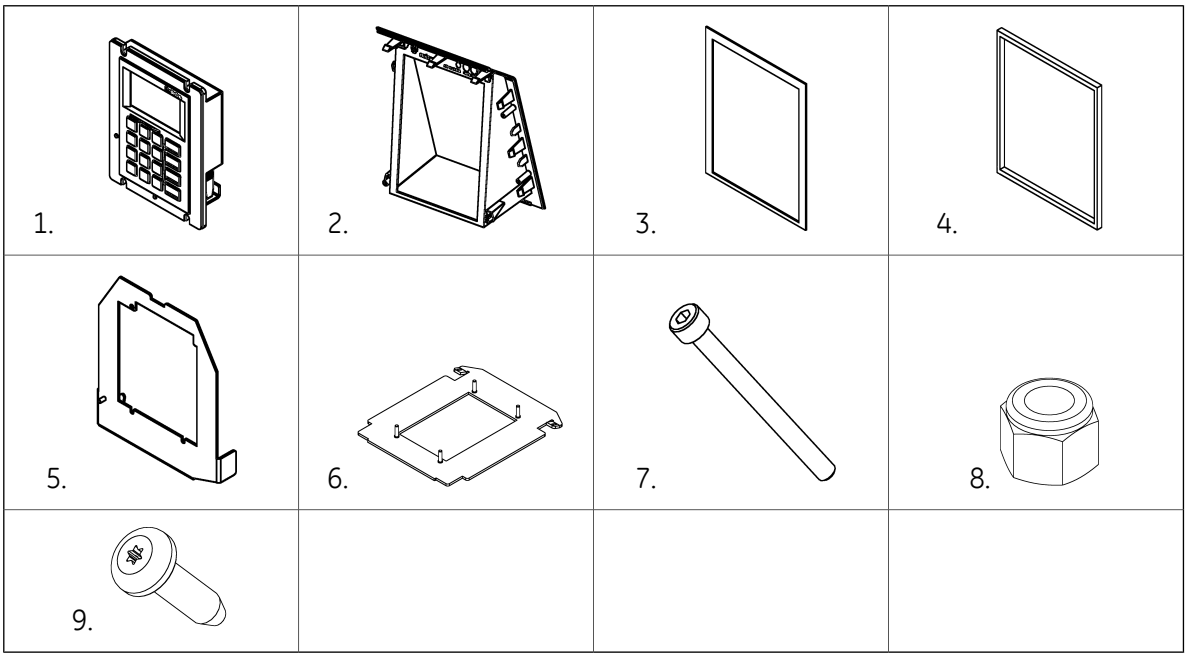

No.	Part Number	Description	Amount
1	WM052590	Key pad Verifone UX100	1
2	WM052607-A032	Panel, inset, key pads	1
3	WM051072	Gasket, pin pad adapter, small PT	1
4	WM051065	Gasket, h=220, w=178, t=8	1
5	WM053898	Support, flat, key pad, Verifone UX 100	1
6	WM052429	Support, flat, Hypercom Artema	1
7	WB000209-0008	Screw, hexagon socket CAP, M4x14	4
8	WB000229-0002	Lock nut, M4	4
9	WM054537-0001	Self tapping screw for plastic	2

5.13.7 Verifone UX110

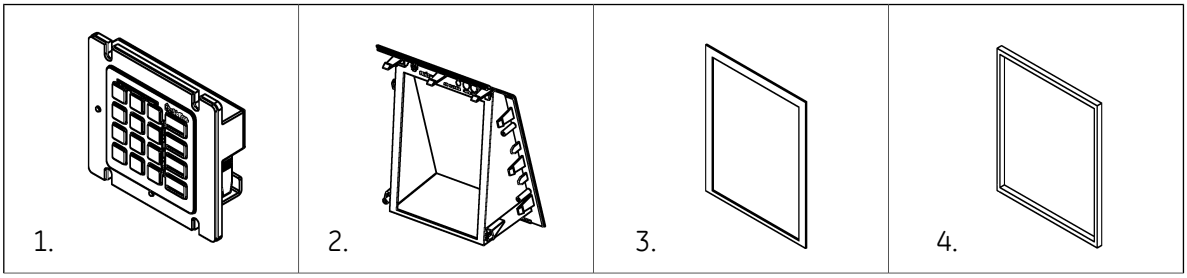

5. 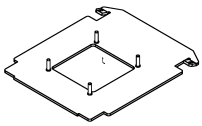	6. 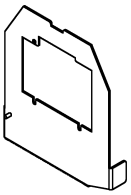	7. 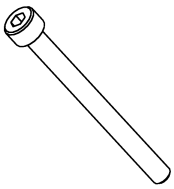	8. 
9. 			

No.	Part Number	Description	Amount
1	WM052592	Key pad Verifone UX110	1
2	WM052607-A032	Panel, inset, key pads	1
3	WM051072	Gasket, pin pad adapter, small PT	1
4	WM051065	Gasket, h220, w=178, t=8	1
5	WM053891	Support, flat, key pad, Verifone UX 110	1
6	WM054017	Support, Verifone UX100	1
7	WB000209-0008	Screw, hexagon socket CAP, M4x14	4
8	WB000229-0002	Lock nut, M4	4
9	WM054537-0001	Self tapping screw for plastic	2

5.14 Card reader

Cables, see page 228.

Cleaning kit - card readers, see page 242.

5.14.1 Card reader, chip/mag secure injected (Zebra/medium postion)

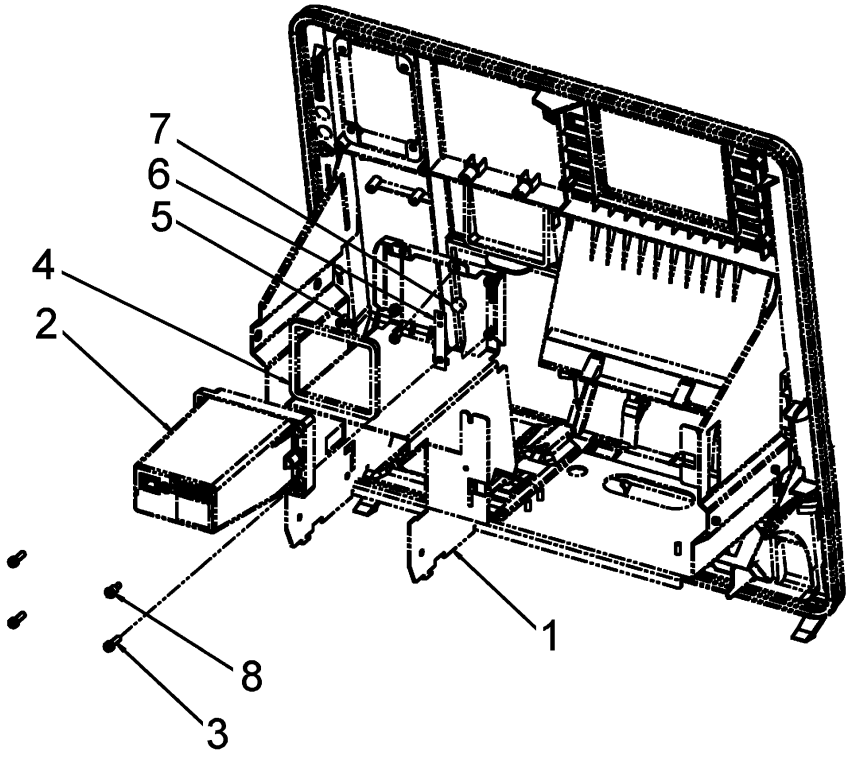

No.	Part Number	Description	Amount
1	WM039427	Support, L-shape, card reader	1
2	WU001002-0001	Card reader chip/mag, secure, injected (incl. security screw from supplier	1
3	WB000209-0008	Screw, hexagon socket CAP, M4x14	3
4	WM045438	Gasket 80x72	1
5	WM045228-0001	Screw, hexagon socket CAP, M4x8, low head	2
6	WM041514	Switch plate, SPM	1
7	WM046169	Knob SPM switch	1
8	WU004886-0001	Temper screw	1
-	see page 55	PT Bezel	

5.14.2 Card reader, chip/mag secyre injected, (Citizen/high postion)

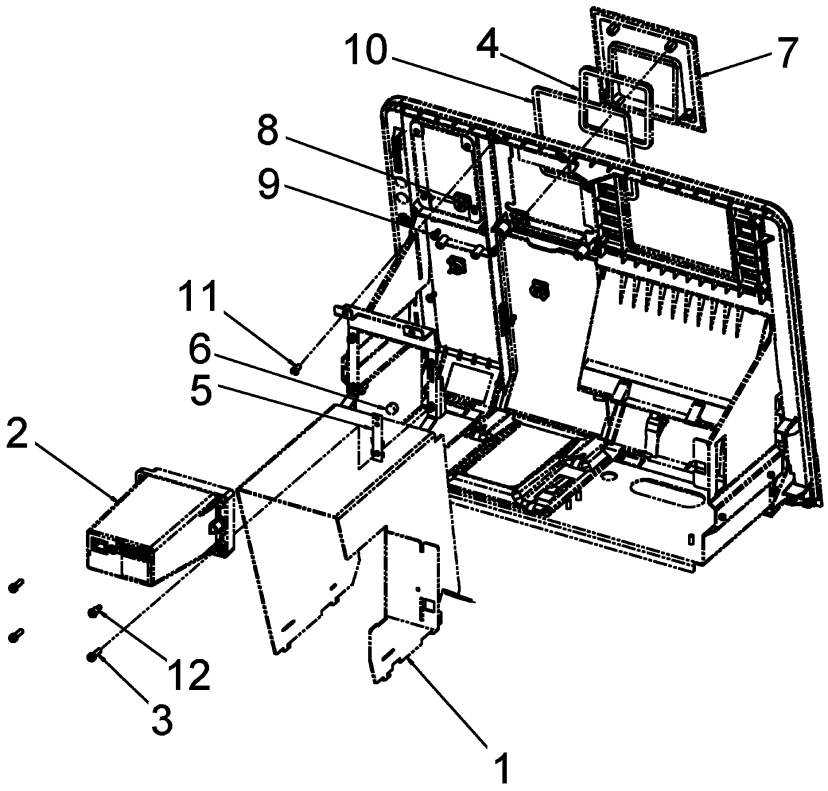

No.	Part Number	Description	Amount
1	WM039422	Support, L-shape, card reader	1
2	WU001002-0001	Card reader	1
3	WB000209-0008	Screw, hexagon socket CAP, M4x14	4
4	WM045438	Gasket 80X72	1
5	WM041514	Switch plate, SPM	1
6	WM046169	Knob SPM switch	1
7	WM046624	Moulded, cover citizen card reader adapter	1
8	WM046625	Moulded, housing for fastening, card reader, Citizen	4
9	WM045329-0001	Self tapping screw, Torx, pan head 4x8, for plastic	4
10	WU007610-0001	Gasket upper card reader panel, Citizen	1
11	WM045228-0001	Screw, hexagon socket cap, M4x8, low head	2
12	WU004886-0001	Tamper screw	1
-	see page 56	Support, U-shape, bottom plate	

5.14.3 Card reader, mag type, (ADA/low position)

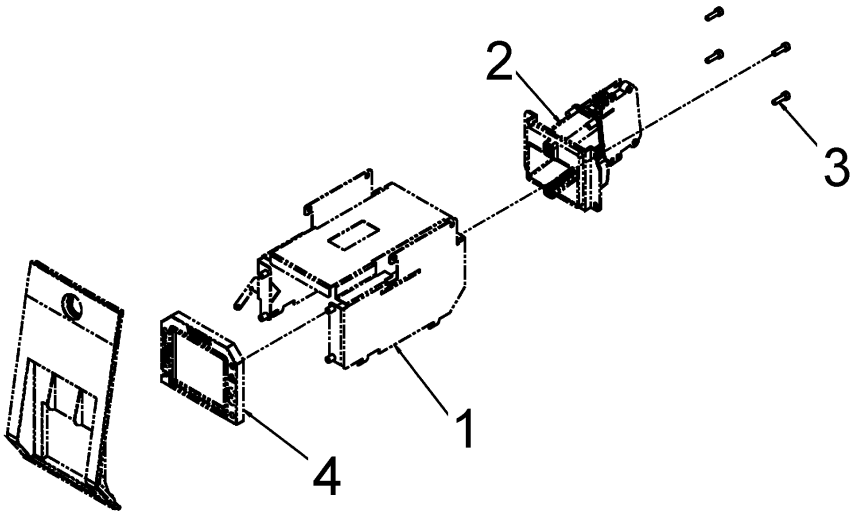

No.	Part Number	Description	Amount
1	WM042098	Support, box shape, card reader ADA	1
2		**Card reader**	
	WU003908-0001	- Mag only, Sankyo	1
	WU000899-0001	- Magnetic, insertion type, single head	1
	WU002747-0001	- Secure mag only, Sankyo	1
3	WB000663-0001	Taptite screw, cross recessed, pan head, M3x6	4
4	WM044173	Gasket card reader	1
-	see page 82	Panel, printer door	

5.14.4 Card reader, mag type, (Zebra/medium postion)

No.	Part Number	Description	Amount
1		**Card reader**	
	WU003908-0001	- Mag only, Sankyo	1
	WU000899-0001	- Magnetic, insertion type, single head	1
	WU002747-0001	- Secure mag only, Sankyo	1
2	WB000663-0001	Taptite screw, cross recessed, pan head, M3x6	4
3	WM045438	Gasket 80X72	1
4	WM044154	Moulded water tray	1
5	WM045379-0001	Tube, flexible di=7, do=9	1

5.14.5 Card reader, mag type, (Citizen/High postion)

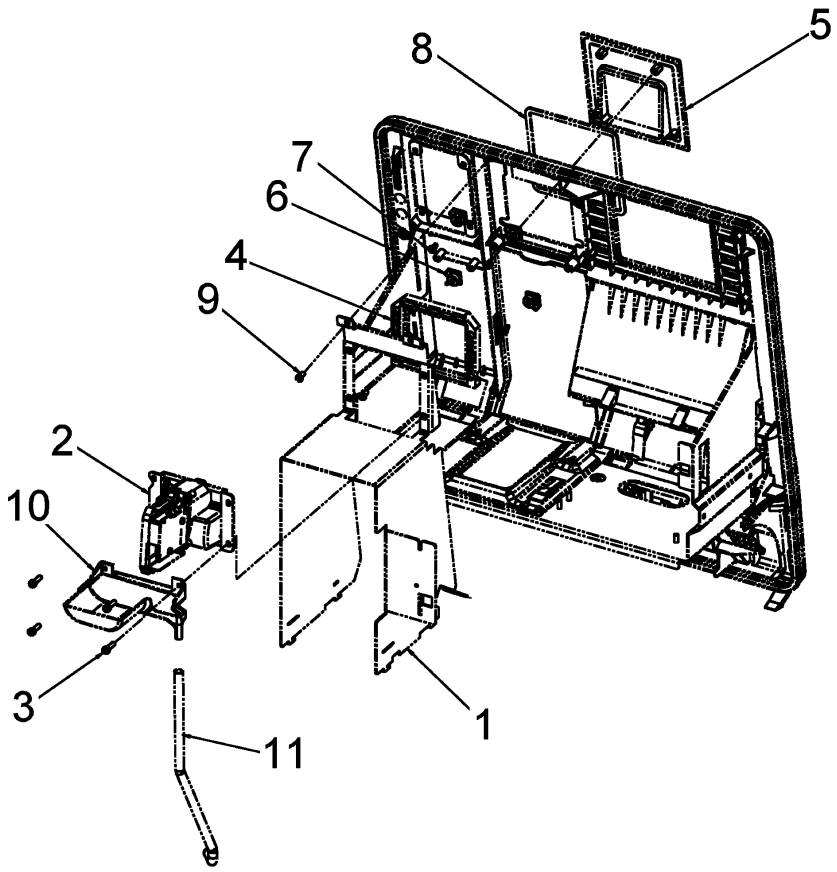

No.	Part Number	Description	Amount
1	WM046623	Support, U-shape, card reader Citizen	1
2		**Card reader**	
	WU003908-0001	- Mag. only, Sankyo	1
	WU000899-0001	- Magnetic, insertion type, single head	1
	WU002747-0001	- Secure mag. only, Sankyo	1
3	WB000663-0001	Taptite screw, cross recessed, pan head, M3x6	4
5	WM046624	Moulded, cover Citizen card reader adapter	1
6	WM046625	Moulded, housing for fastening, card reader, Citizen	4
7	WM045329-0001	Self tapping screw, Torx, pan head 4x8, for plastic	4
8	WU007610-0001	Gasket upper card reader panel, Citizen	1
9	WM045228-0001	Screw, hexagon socket CAP, M4x8, low head	2
10	WM044154	Moulded water tray	1

No.	Part Number	Description	Amount
11	WM045379-0002	Tube, flexible di=7, do=9	1

5.14.6 Hypercom K1200+H2210 cardreader

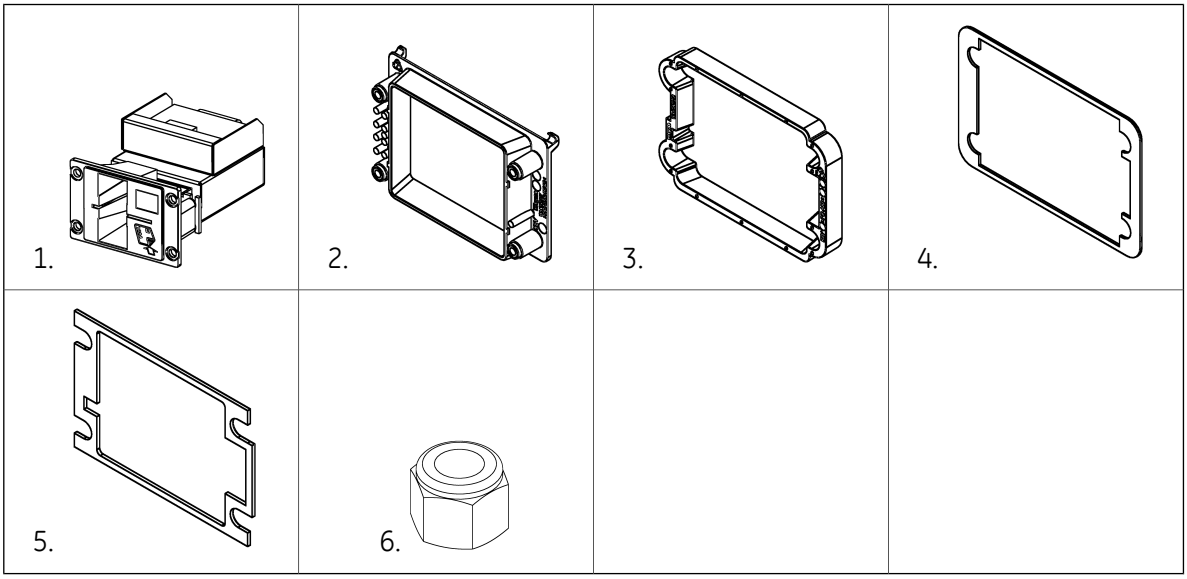

No.	Part Number	Description	Amount
1	WM017269	Card reader insertion Hypercom EMV	1
2	WM052603-A032	Panel, card reader, front adapter with fasteners	1
3	WM050118	Panel, card reader, adapter, inner	1
4	WM051069	Gasket, card reader adapter, small PT	1
5	WM051070	Gasket, card reader, small PT	1
6	WB000229-0002	Lock nut, M4	2

5.14.7 Hypercom, Artema

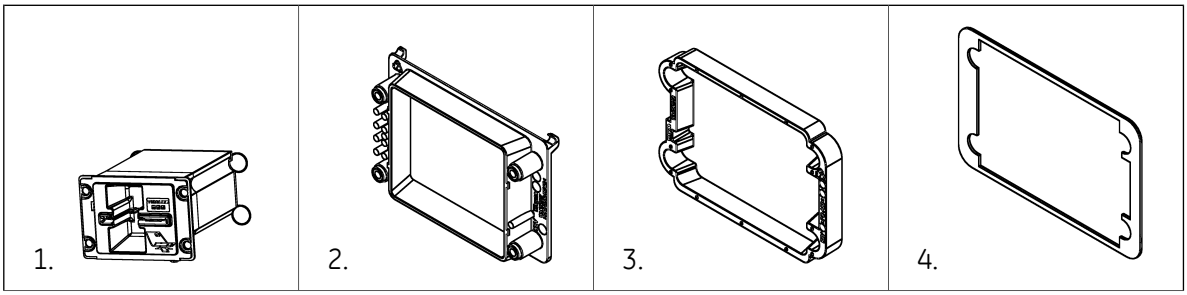

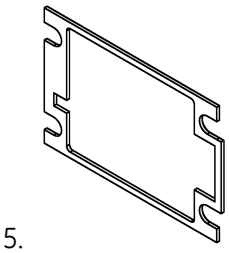
5.

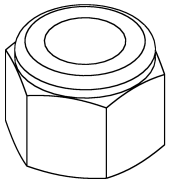
6.

No.	Part Number	Description	Amount
1	WM041178	Card reader, Hypercom Artema	1
2	WM052603-A032	Panel, card reader, front adapter with fasteners	1
3	WM050118	Panel, card reader, adapter, inner	1
4	WM051069	Gasket, card reader adapter, small PT	1
5	WM051070	Gasket, card reader, small PT	1
6	WB000229-0002	Lock nut, M4	2

5.14.8 Ingenico iUP/iUC250, Card reader and Key pad


1.

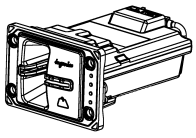
2.

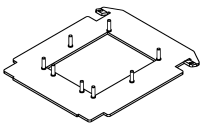
3.

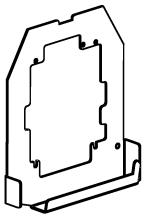
4. ¿

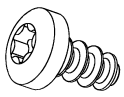
5.

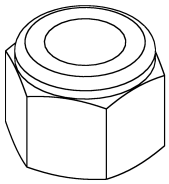
6.

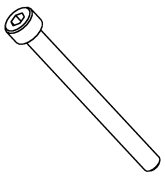
7.

No.	Part Number	Description	Amount
1	WM052369	Ingenico iUP250, key pad	
2	WM052368	Ingenico iUC150, card reader	
3	WM051314	Support, flat, key pad, Ingenico iUP250	1
4	WM051330	Support, Ingenico iUP250	1
5	WM045329-0001	Self tapping screw, torx, pan head 4x8, for plastic	4
6	WB000229-0002	Lock nut, M4	8
7	WB000209-0008	Screw, hexagon socket CAP, M4x14	1

5.14.9 Verifone UX300

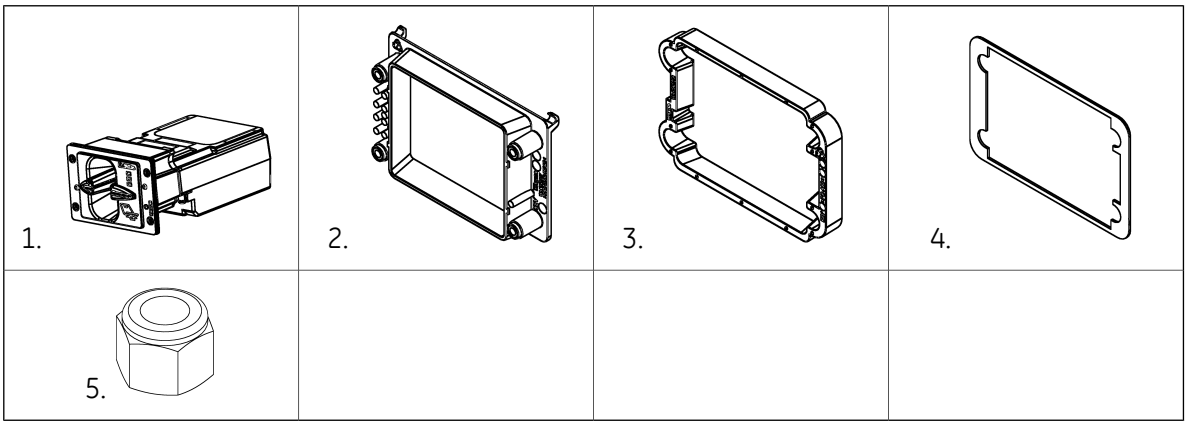

No.	Part Number	Description	Amount
1	WM052591	Card reader verifone UX300	1
2	WM052603-A032	Panel, card reader, front adapter w/fasteners	1
3	WM050118	Panel, card reader, adapter, inner	1
4	WM051069	Gasket, card reader adapter, small PT	1
5	WB000229-0002	Lock nut, M4	2

5.15 Contactless reader

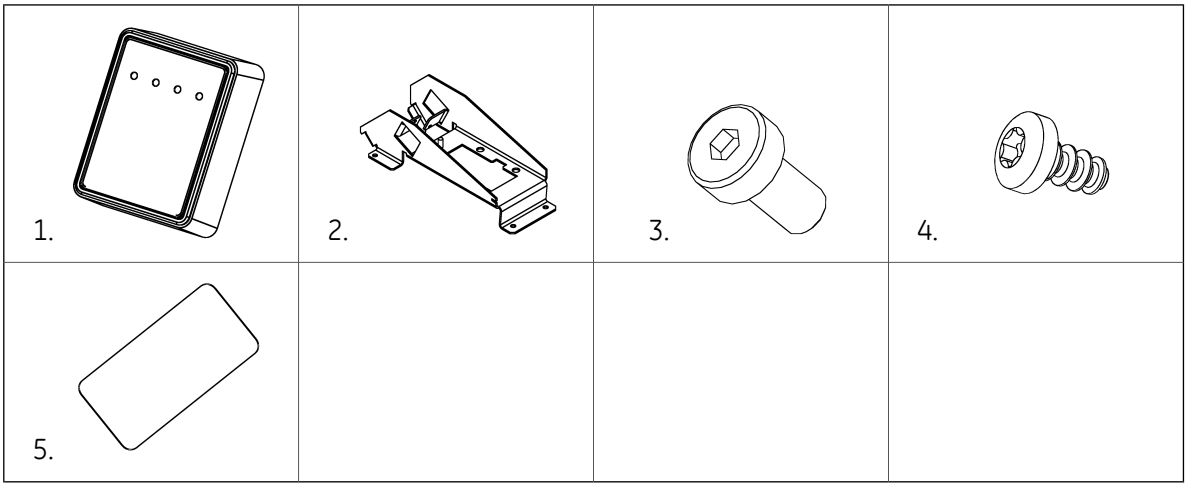

No.	Part Number	Description	Amount
1	WU007054-0001	Card reader, contactless C150, internal mount, portrait	1
2	WM052454	Support box-shape, scanner and contactless reader	1
3	WM045228-0001	Screw, hexagon socket cap, M4 x 8, low head	2
4	WM045329-0001	Self tapping screw, Torx, pan head 4x8, for plastic	4

No.	Part Number	Description	Amount
5	WM053583	Blind panel, decal T=1	1

5.16 Barcode scanner

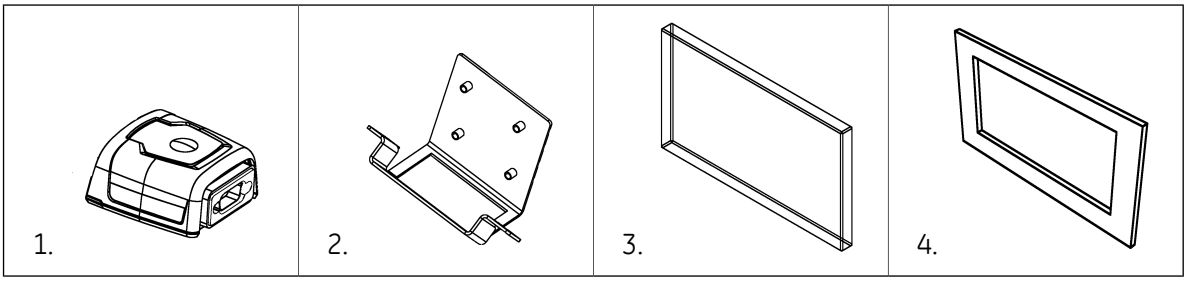

Cables, see page 229.

No.	Part Number	Description	Amount
1	WU006442-0001	Barcode scanner	1
2	WM052454	Support for barcode scanner	1
3	WM047579	Glass for barcode scanner	1
4	WM051003	Adhesive, dow corning 3526 (alt. WM054487 dow corning 3636 or WM053800 Loctite 5607)	1

5.17 iButton/Dallas key

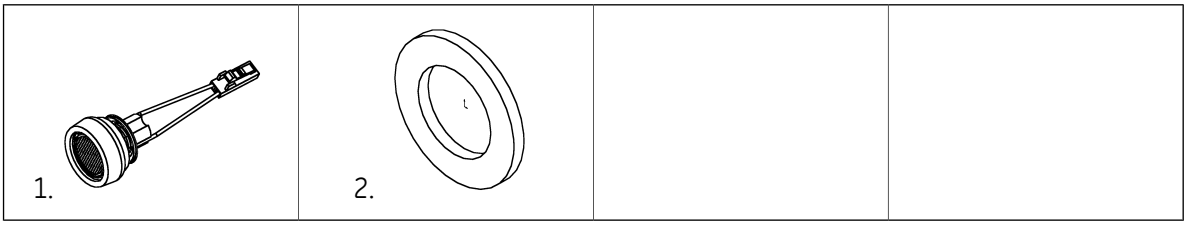

Cables, see page 230.

No.	Part Number	Description	Amount
1	WR001263	Button, iButton reader	1
2	WR001257	Gasket, iButton	1

5.18 Printer

5.18.1 Printer, 60mm, Zebra

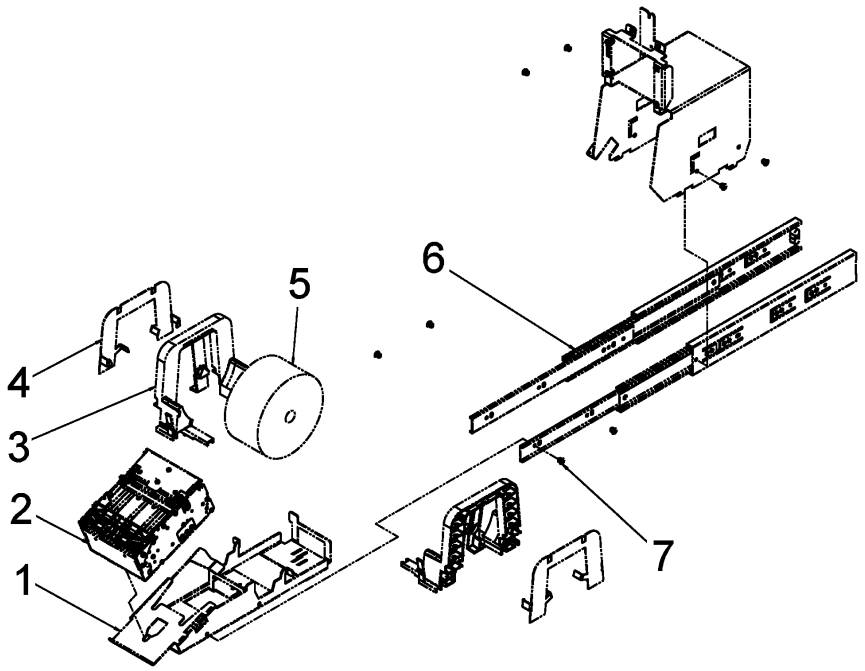

Cables, see page 239.

No.	Part Number	Description	Amount
1	WM039400	Support, U-shape, Zebra printer	1
2	WU006648-0001	Printer Zebra, 60mm	1
3	WM044276	Moulded support, paper roll	2
4	WM046250	Support, U-shape	1
5	WU007118-0001	Paper roll 60mm	1
6	WM045125	Rail l=300, complete assembly	2
7	WM028446-0001	Pop rivet, dome head, 4.0 diameter x 7, grip range 0-3,2	8
-	see page 68	Support, L-shape, card reader	

5.18.2 Printer, 60mm, Zebra (5,7''' display)

No.	Part Number	Description	Amount
1	WU006648-0001	Printer Zebra, 60mm	1
2	WM048061	Paper roll	1
3	WM048062	Moulded, rail, printer support	1

No.	Part Number	Description	Amount
4	WM045329-0001	Self tapping screw, Torx, pan head 4x8, for plastic	3
5	WM054095	Support L-shape, printer	1
6	WM054097-0001	Support U-shape, adapter Zebra	1
7	WM040483	Support, shaft paper	1
8	WU007118-0001	Paper roll thermal OCPT	1
9	WM045125	Rail l=300, complete assembly	1
10	WM028446-0001	Pop rivet, dome head, 4.0 diameter x7, grip range 0-3,2	4

5.18.3 Printer, 60mm, Zebra (10,4''' display)

No.	Part Number	Description	Amount
1	WU006648-0001	Printer Zebra, 60mm	1
2	WM048061	Paper roll	1
3	WM048062	Moulded, rail, printer support	1
4	WM045329-0001	Self tapping screw, Torx, pan head 4x8, for plastic	3
5	WM054095	Support L-shape, printer	1
6	WM054097-0001	Support U-shape, adapter Zebra	1
7	WM040483	Support, shaft paper	1
8	WM040489	Paper roll 80 mm	1
9	WM045125	Rail l=300, complete assembly	1
10	WM028446-0001	Pop rivet, dome head, 4.0 diameter x7, grip range 0-3,2	4

5.18.4 Printer, 80mm, Zebra (5,7'' display)

No.	Part Number	Description	Amount
1	WU006648-0002	Printer Zebra, 60mm	1
2	WM048061	Paper roll	1
3	WM048062	Moulded, rail, printer support	1
4	WM045329-0001	Self tapping screw, Torx, pan head 4x8, for plastic	3
5	WM054095	Support L-shape, printer	1

No.	Part Number	Description	Amount
6	WM054097-0001	Support U-shape, adapter Zebra	1
7	WM040483	Support, shaft paper	1
8	WU007118-0001	Paper roll thermal OCPT	1
9	WM045125	Rail l=300, complete assembly	1
10	WM028446-0001	Pop rivet, dome head, 4.0 diameter x7, grip range 0-3,2	4

5.18.5 Printer, 80mm, Zebra (10,4" display)

No.	Part Number	Description	Amount
1	WU006648-0002	Printer Zebra, 60mm	1
2	WM048061	Paper roll	1
3	WM048062	Moulded, rail, printer support	1
4	WM045329-0001	Self tapping screw, Torx, pan head 4x8, for plastic	3
5	WM054095	Support L-shape, printer	1
6	WM054097-0001	Support U-shape, adapter Zebra	1
7	WM040483	Support, shaft paper	1
8	WM040489	Paper roll 80 mm	1
9	WM045125	Rail l=300, complete assembly	1
10	WM028446-0001	Pop rivet, dome head, 4.0 diameter x7, grip range 0-3,2	4

5.18.6 Printer, Citizen

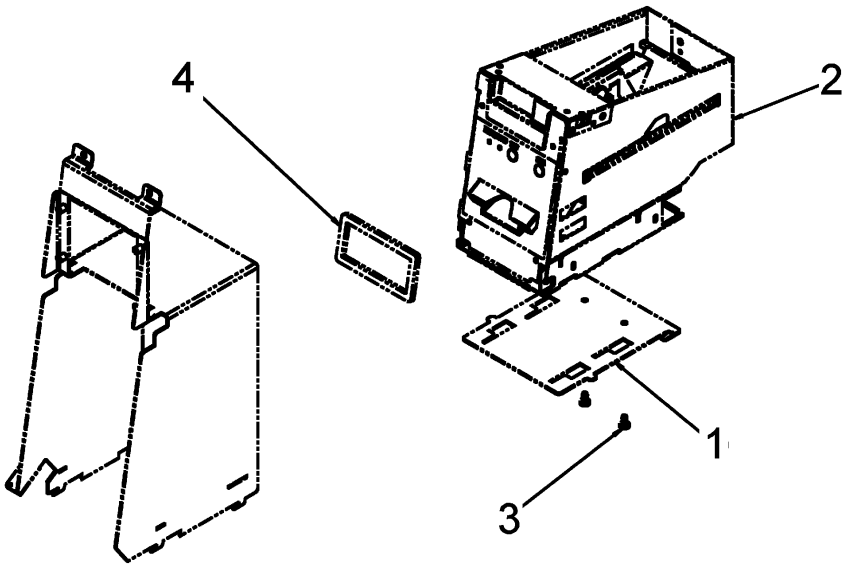

Cables, see page 228.

No.	Part Number	Description	Amount
1	WM039420	Support, flat, printer Citizen	1
2	WU005878-0001	Printer DW-12	1
3	WM045308-0002	Taptite screw, Torx, pan head, M4x8	2
4	WM046834	Gasket Citizen printer	1
-	see page 71	Support, U-shape, card reader Citizen	

5.19 Cover decal area PT

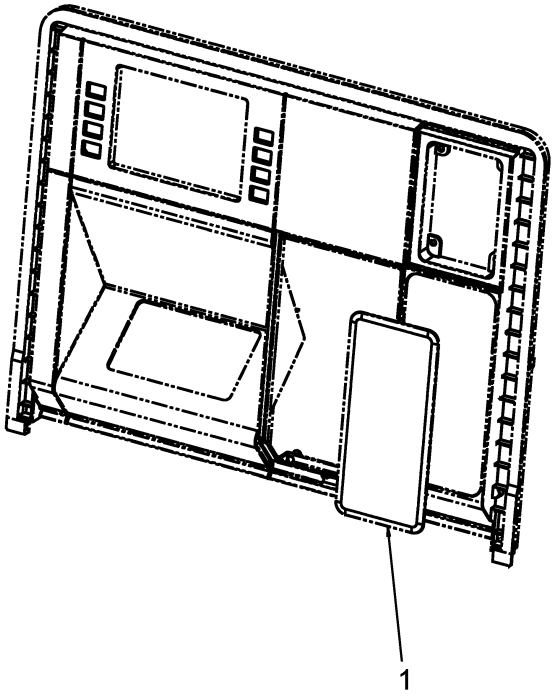

No.	Part Number	Description	Amount
1	WM044409	Moulded decor panel	1

5.20 Lock, PT

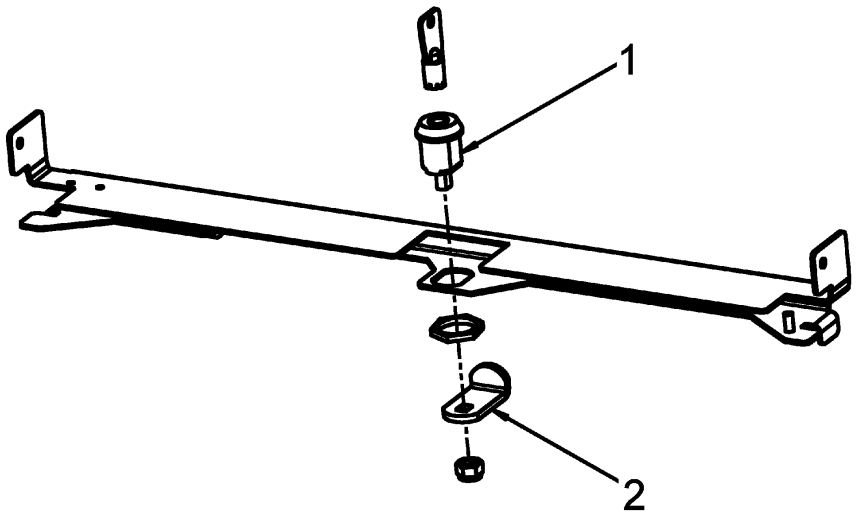

No.	Part Number	Description	Amount
1		**Lock**	
	WM026155-0001	- Lock, individually keyed	1
	WU007624-0001	- Without latch, std, DHW1 key code	1
2	WM045965	Latch L-shape, range=24 mm	1
-	see page 37	Support, U-shape, EHPM	

5.21 Printer door

5.21.1 Printer door small

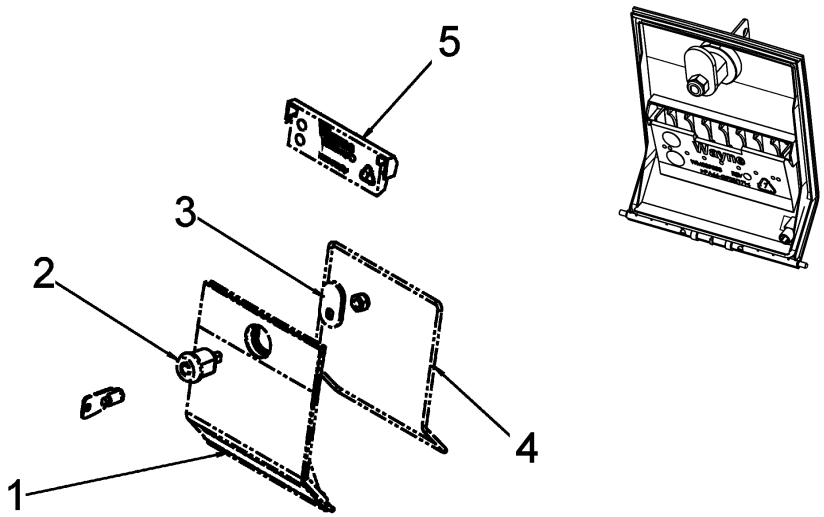

No.	Part Number	Description	Amount
1	WM039383	Panel, printer door, small	1
2	WU007624-0002	Lock without latch, std, DW2 key code	1
3	WM039385	Latch, flat, range=25 mm	1
4	WM045302-0001	Gasket profile - L=500	1
5	WM041208	Support, flat paper guide	1

5.21.2 Printer door large

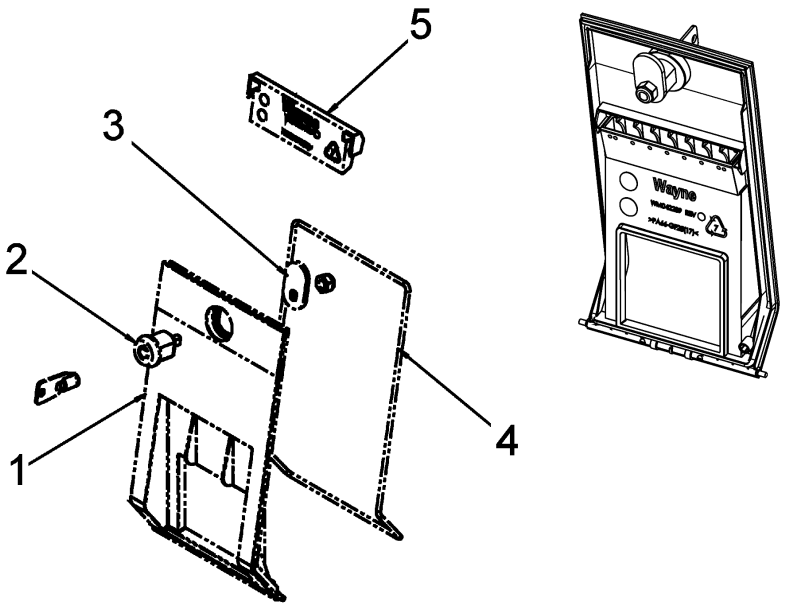

No.	Part Number	Description	Amount
1		**Panel, printer door**	
	WM042289	- Large, printer above	1
	WM039423	- Large	1
2	WU007624-0002	Lock without latch, DW2 key code	1
3	WM039385	Latch, flat, range=25 mm	1
4	WM045302-0002	Gasket profile - L=660	1
5	WM041208	Support, flat paper guide	1

5.22 Push to start button

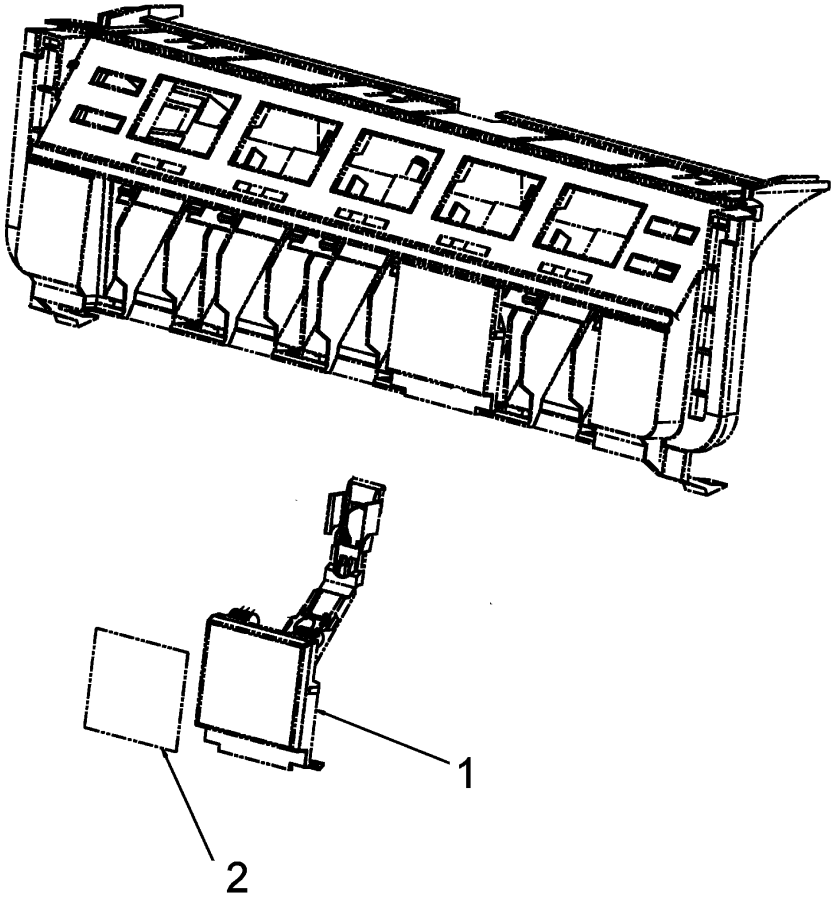

No.	Part Number	Description	Amount
1	WU007599-0001	Push-button (PTS assembly with dome and magnet)	1 - 5
2	WM039328	Blind panel, blank button	0 - 5

5.23 UPD board

5.23.1 UPD board, LEE

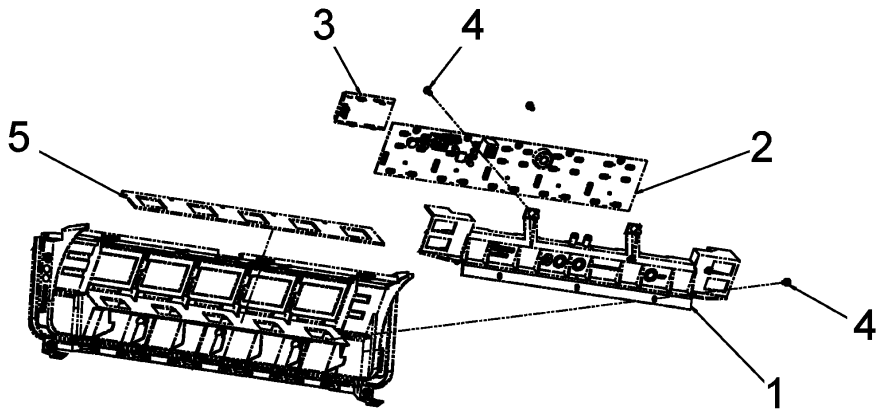

No.	Part Number	Description	Amount
1	WM039282	Support, box shape, LEEs back part	1
2	WU007563-0001	Display board Helix main UPD	1
3		**Display, module UPD**	
	WM040824-0007	- 5x12.7mm single	1 - 5
	WM040824-0008	- 5x25.4mm single	1 - 5
	WM040824-0009	- 5x12.7mm dual	1 - 5
4	WM045329-0001	Self tapping screw, Torx, pan head 4x8, for plastic	2
5	WM041399	Gasket, push to start sealing	1
-	see page 44	Bezel lower electronic enclosure	

5.23.2 UPD board, EH

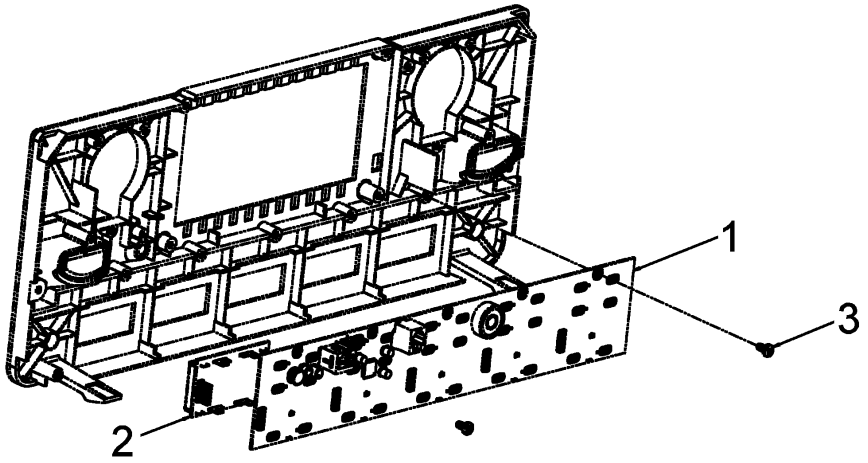

No.	Part Number	Description	Amount
1	WU07563-0001	Display board Helix main UPD	1
2	WM040824-0007	Display, module UPD 5x12.7mm single	1 - 5
3	WM045329-0001	Self tapping screw, Torx, pan head 4x8, for plastic	2

5.24 Sales/Volume display

5.24.1 Sales/Volume display

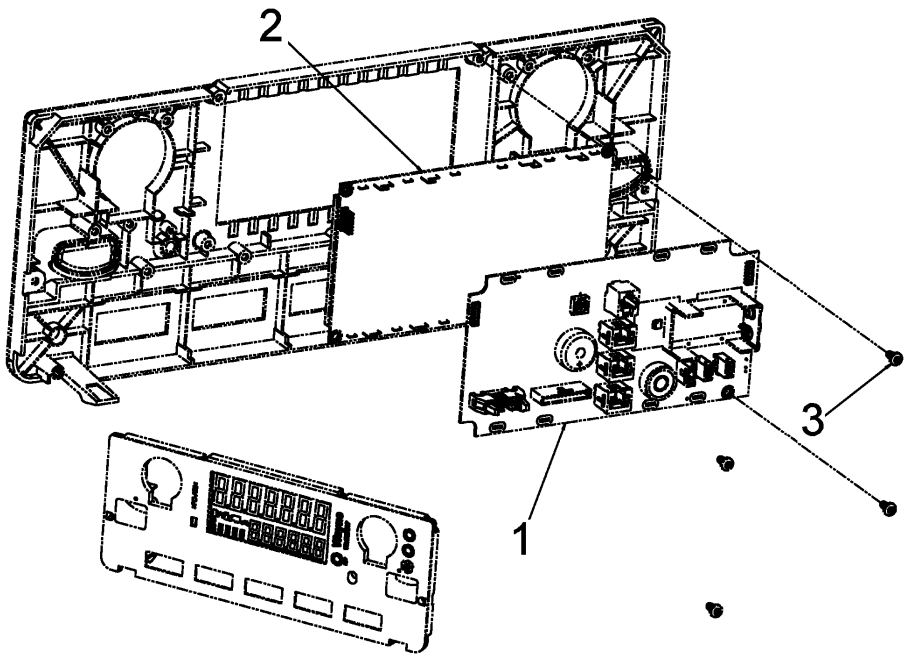

No.	Part Number	Description	Amount
	WM051625-0001	Display, module, complete S/V TN NEG	

No.	Part Number	Description	Amount
1	WU007562-0001	- Display board, main, cash/volume	1
2	WM040823-0002	- Display, module sales/volume	1
3	WM045329-0001	Self tapping screw, Torx, pan head 4x8, for plastic	4

5.24.2 Sales/Volume display with single UPD

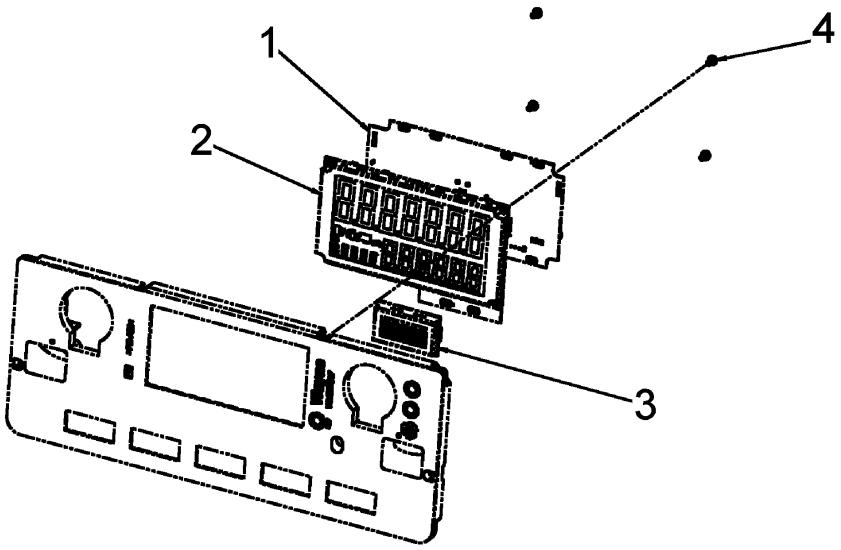

No.	Part Number	Description	Amount
1		**Display board**	
	WM050782-0001	- Programmed, Helix sales/volume control	1
	WU009332-0001	Module, jumper, authorization (Always needed together with WM050782-0001 , when UL!)	1
2	WM040823-0002	Display, module sales/volume	1
3	WM040824-0007	Display, module UPD 5x12.7mm single	1
4	WM045329-0001	Self tapping screw, Torx, pan head 4x8, for plastic	4

5.24.3 Sales/Volume display dual

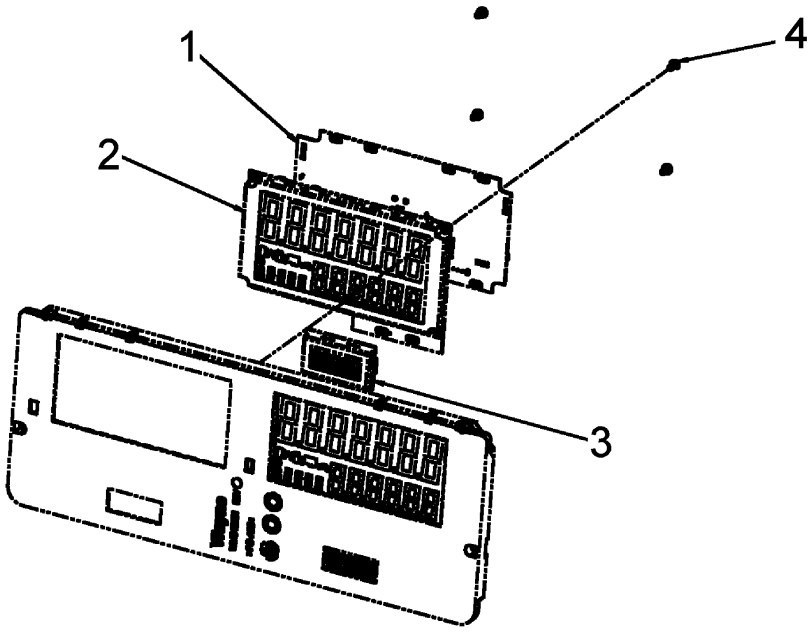

No.	Part Number	Description	Amount
1	WM050782-0001	Display board dual	2
2	WM040823-0002	Display, module sales/volume	2
3	WM040824-0007	Display, module UPD 5x12.7mm single	2
4	WM045329-0001	Self tapping screw, Torx, pan head 4x8, for plastic	8

5.25 U-frame and decor

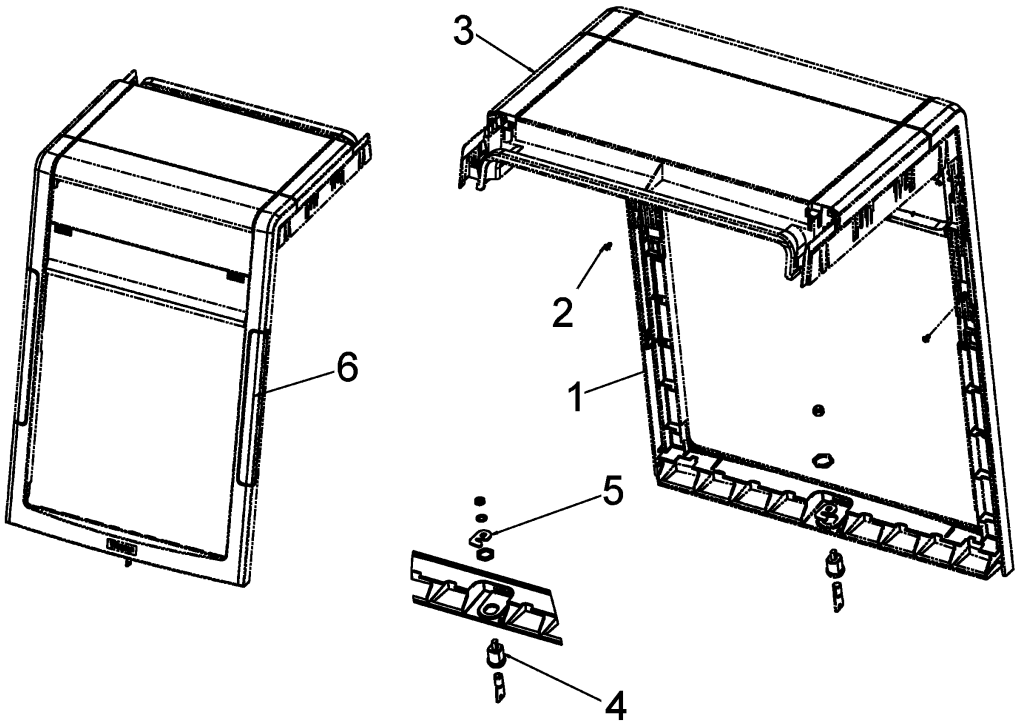

No.	Part Number	Description	Amount
1		**Frame, U-shaped**	
	WM046993-A040	- Decor, no cover	1
	WM046991-A040	- Decore	1
2	WM046887	Taptite screw, Torx, countersunk head, M4x8	2
3	WM046995-A040	Frame top decor, silver	2
4		**Lock**	
	WM026155-0001	- Individually keyed	1
	WU007624-0001	- Without latch, DHW1 key code	1
5	WM039598	Latch, flat, range=13mm	1
6	WM042405	Cover plate frame cover	0 or 2
-	see page 38	Top panel, EHPM top panel	

5.26 Speaker

5.26.1 Speaker, media

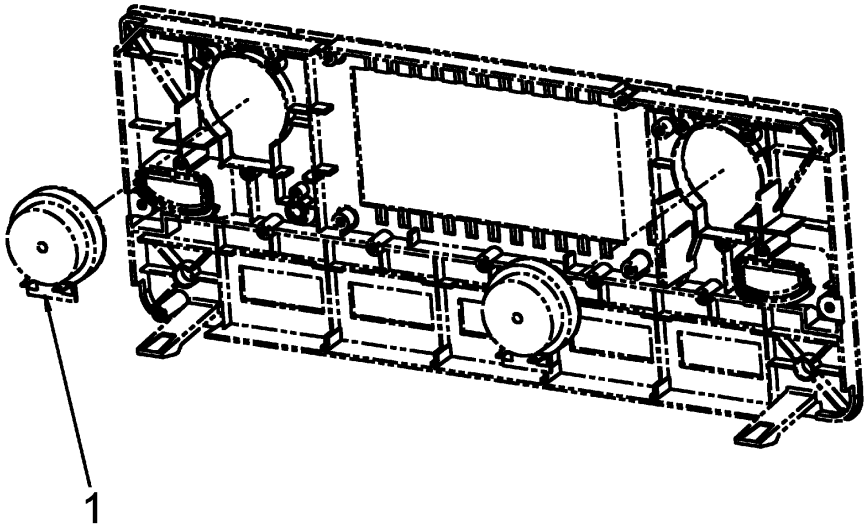

No.	Part Number	Description	Amount
1		**Speaker**	
	WM045906-0001	- 4x with cable 2x0.5 l=800,400	1
	WM045903-0001	- 2x with cable 2x0.5 l=800 (UL)	2
	WM048866-0002	- 2x with cable 2x0.5 l=800 (IEC)	2

5.26.2 Speaker, intercom

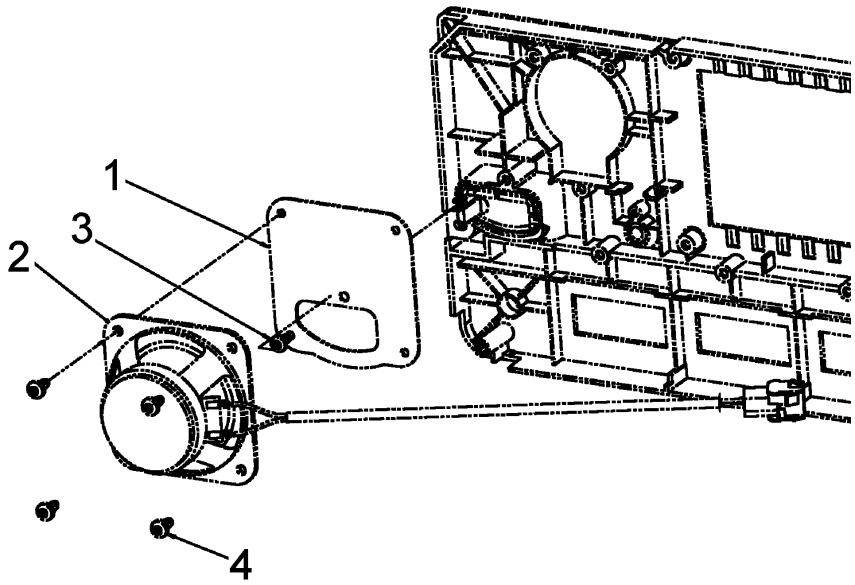

Cable, see page 238.

No.	Part Number	Description	Amount
1	WM039599	Support, flat, speaker mounting plate	2
2	WM030248	Intercom speaker	1
-		Gasket	
3	WM045329-0001	Self tapping screw, Torx, pan head 4x8, for plastic	1
4	WM045308-0002	Taptite screw, Torx, pan head, M4x8	4

5.27 EMT

Cables, see page 229.

1. 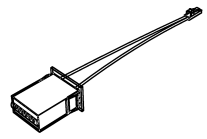	2. 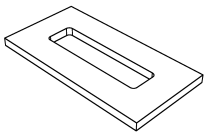		

No.	Part Number	Description	Amount
1	WM042452-0002	Electromechanical totalizer with connector	1 - 4
2	WM050421	Gasket	1-4

5.28 Non-PT config.

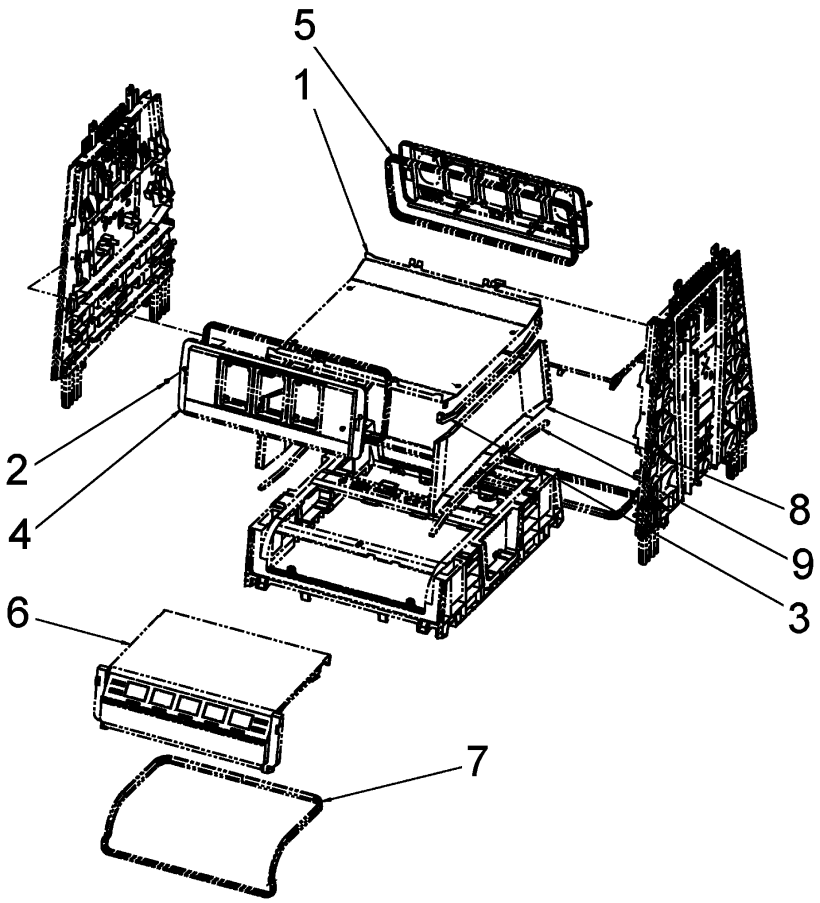

No.	Part Number	Description	Amount
1	WM046987-A032	Panel bottom decor, electronic head	1
2	WM045329-0001	Self tapping screw, Torx, pan head 4x8, for plastic	2
3	WM046660	Gasket l=492, w=10	2
4	WM041921	Front panel with 3 insert areas	2
5	WM045016-0002	Gasket profile l=1224	2
6		**Cover**	
	WM052495-A032	- Blind panel lower enclosure	2
	WM052496-A032	- Bezel lower electronic enclosure with UPD and top cover	2
7	WM045016-0003	Gasket profile l=1465	2
8	WM046988-A032	Cover plate, side panel electronic head	2
9	WM046664	Gasket l=556, w=10	2

No.	Part Number	Description	Amount
-	see page 36	Support, flat EHPM interior side	
-	see page 36	Support, box shape, LEE top + dispensed gasket	

5.29 Blank panel

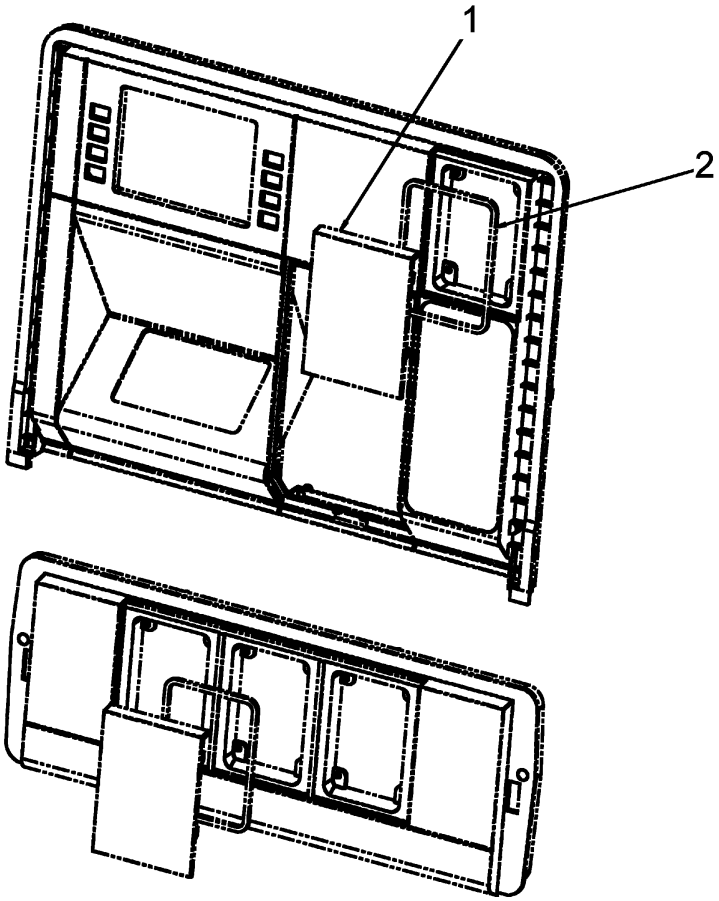

No.	Part Number	Description	Amount
1	WM039320-0002	Panel blank	0 - 3
2	WM045577	Gasket insert panel	0 - 3
-	see page 55	Front panel- Payment terminal	

5.30 Intercom call button

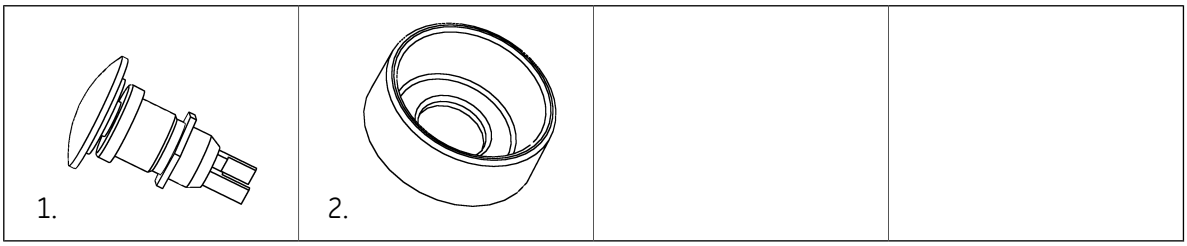

No.	Part Number	Description	Amount
1	WU007094-0001	Switch, call button, gray	1
2	WM049230	Cover push button	1

5.31 Stop switch

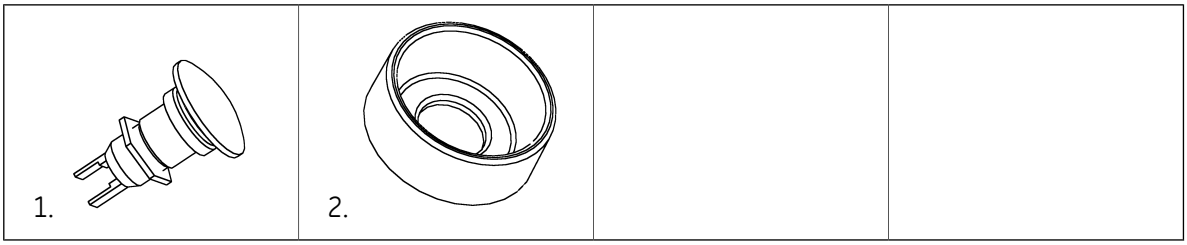

No.	Part Number	Description	Amount
1	WU007094-0002	Switch, button, normally closed, red	1
2	WM049230	Cover push button	1

5.32 Emergency stop button

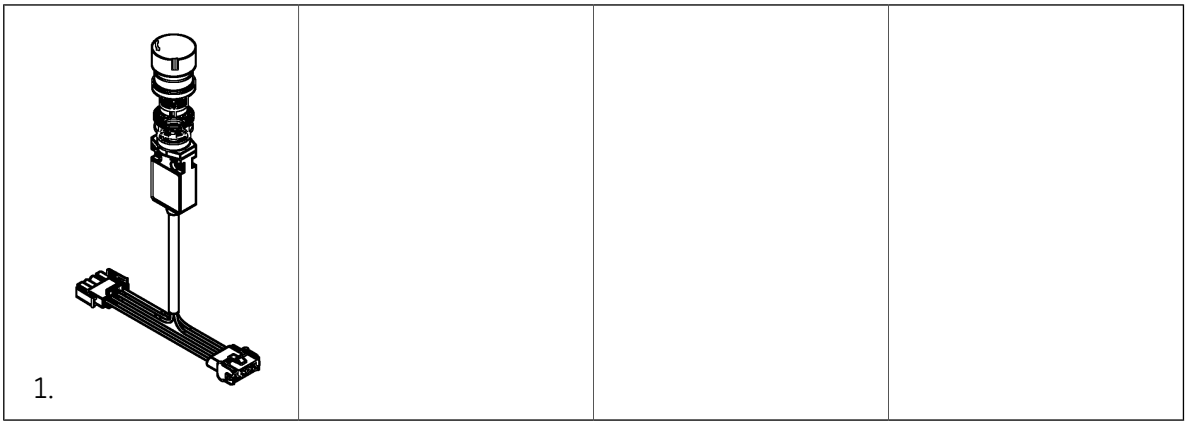

No.	Part Number	Description	Amount
1	WM050354	Emergency stop button	1

5.33 Indicator lamp

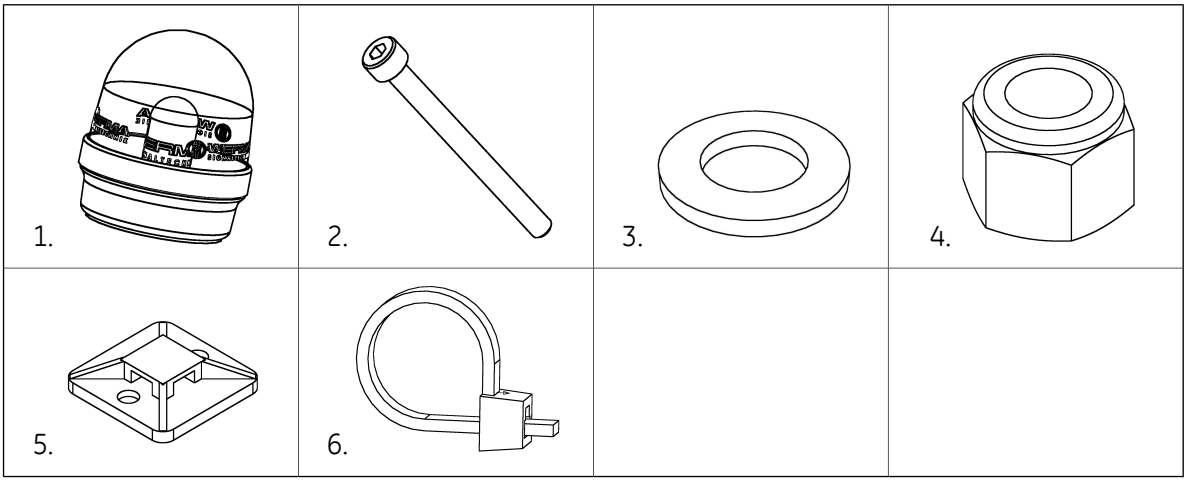

No.	Part Number	Description	Amount
1		**Indicator lamp, red with gasket**	
	WM050241-0001	- Red	
	WM050241-0002	- Green	
	WM050241-0003	- White	
2	WB000209-0008	Screw, hexagon socket cap, M4x14	2
3	WB000232-0002	Washer, plain, M4 ID=4.3, OD=9, T=0.8	2
4	WB000229-0002	Lock nut, M4	2
5	WB000595	Cable tie, mounting base	3
6	WB000337-0001	Cable tie, w=2.5, l=100	

5.34 Annunciator/buzzer/beeper for PT

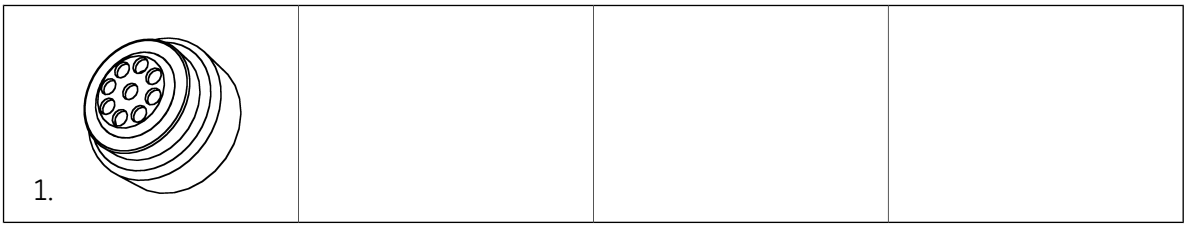

Cables, see page 226.

No.	Part Number	Description	Amount
1		**Buzzer, beeper, annunciator**	
	WU000638-0001	- UL	1
	WM020649-0002	- IEC	1

5.35 On/off switch

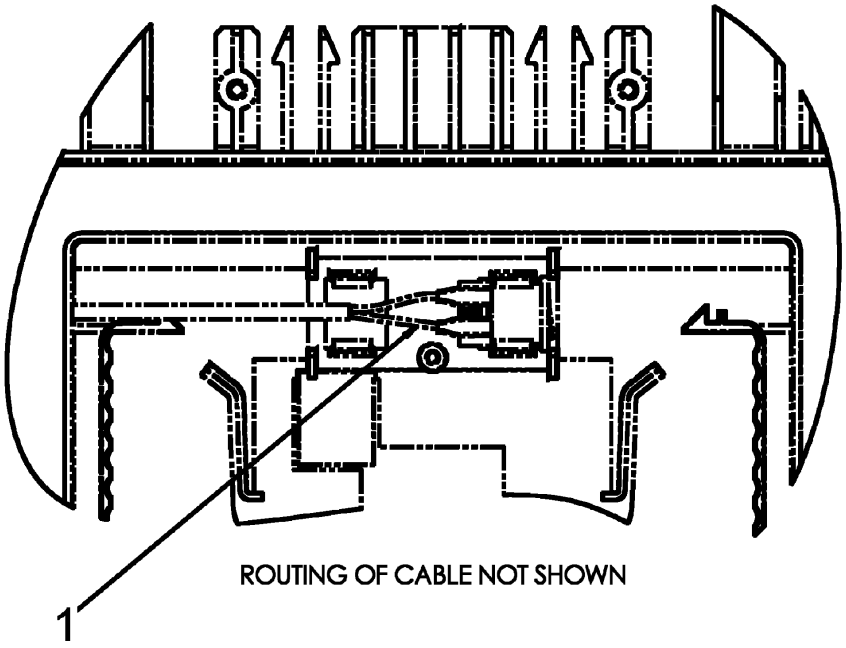

No.	Part Number	Description	Amount
1		**On/off switch**	
	WM045769-0001	- Cable 2x0.75, UL	1
	WM042316-0001	- Cable 4x0.75, IEC	1

5.36 Security switch

5.36.1 Security switch - std

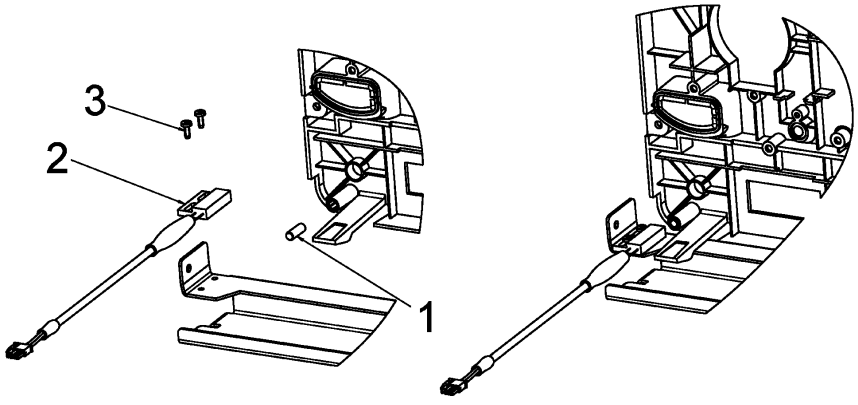

No.	Part Number	Description	Amount
1	WM001626	Magnet	1
2	WM045692-0001	Security switch, magnetic reed 2-wire normally close cable l=1300	1

No.	Part Number	Description	Amount
3	WB000663-0001	Taptite screw, cross recessed, pan head, M3x6	2
-	see page 68	Support, L-shape, card reader	

5.36.2 Security switch - PT

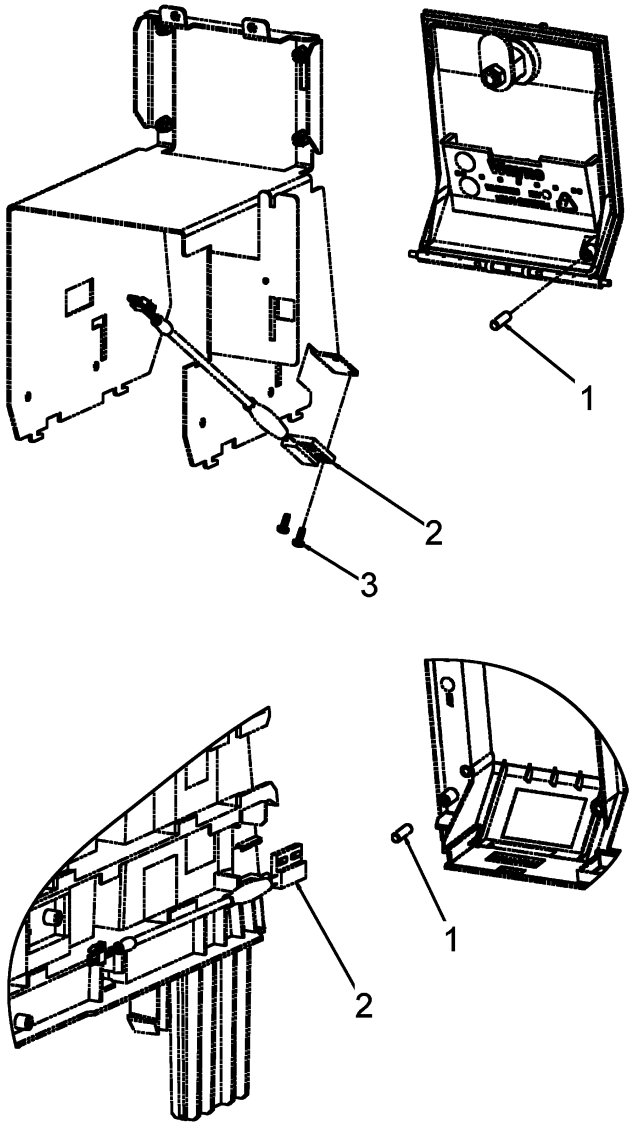

No.	Part Number	Description	Amount
1	WM001626	Magnet pin	2
	WM021382	Magnet for Security switch, D=14, H=3, Used when 10,4" and payment	2
2	WM045692-0001	Security switch, magnetic reed 2-wire normally close cable l=1300	2
3	WB000663-0001	Taptite screw, cross recessed, pan head, M3x6	2

No.	Part Number	Description	Amount
-	see page 68	Support, L-shape, card reader	

5.37 Nozzle converter board

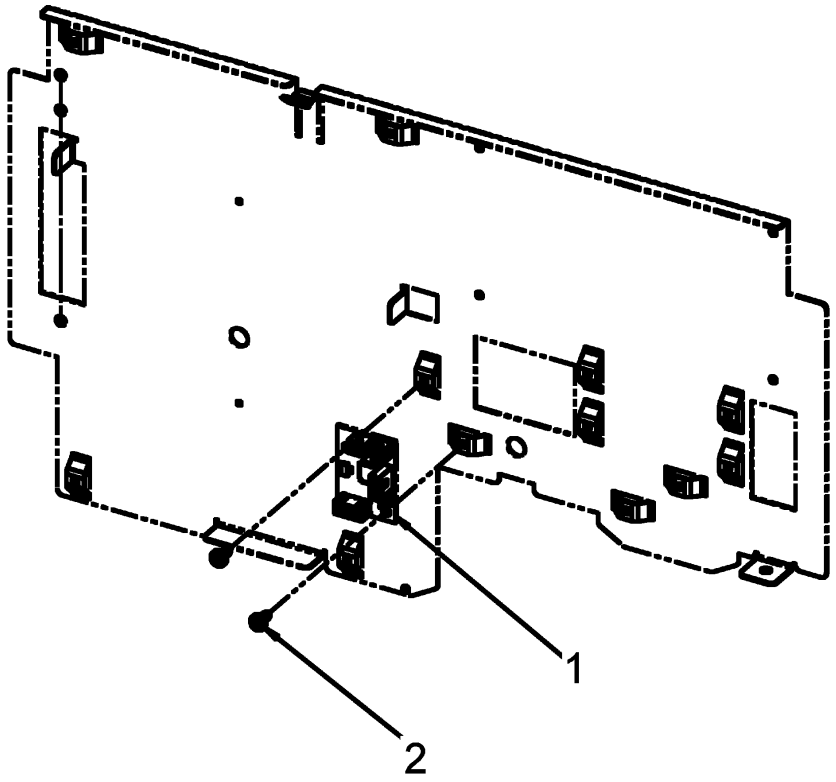

No.	Part Number	Description	Amount
1	WU004202	Board nozzle switch converter	1
2	WM045308-0002	Taptite screw, Torx, pan head, M4x8	2
-	see page 37	Support, U-shape, EH base plate	

5.38 Float

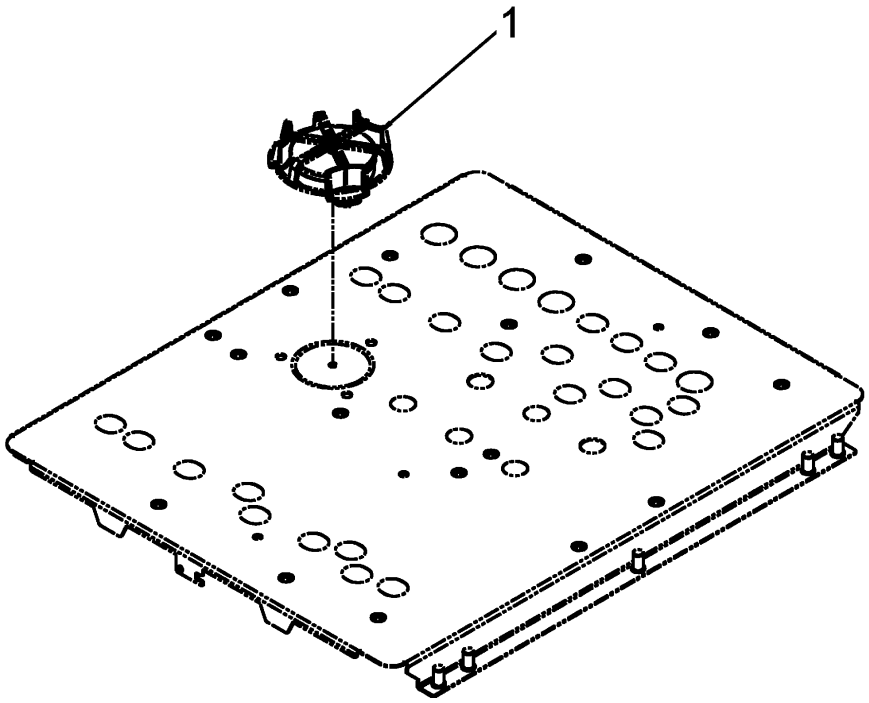

No.	Part Number	Description	Amount
1	WM046046	Float	1
-	see page 141	Support, box shape LEE bottom	

5.39 Ethernet switch

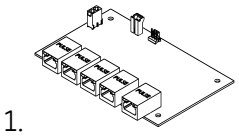

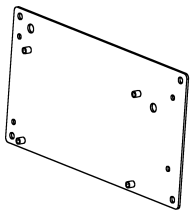

No.	Part Number	Description	Amount
1	WU007300-0001	Ethernet switch, 5 port	1
2	WM048515	Support, flat	1

5.40 LED-Com

Cables, see page 232.

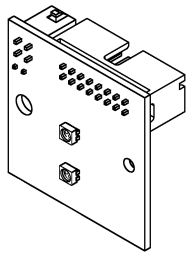

No.	Part Number	Description	Amount
1	WM048942-0001	LED-Com board	1

5.41 Healy

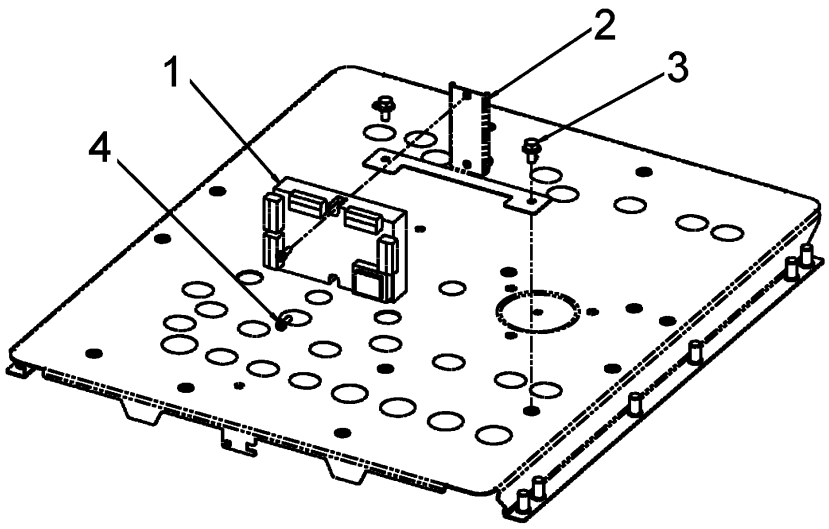

No.	Part Number	Description	Amount
1	WU007080	Board Healy MC-100 module	1
2	WM042602	Support, L-shape Healy	1
3	WM019873-0001	Screw, hex head, M6x12, with flange	2
4	WB000209-0009	Screw, hexagon socket CAP, M4x12	2
-	see page 141	Support, box shape LEE bottom	

5.42 PCN box

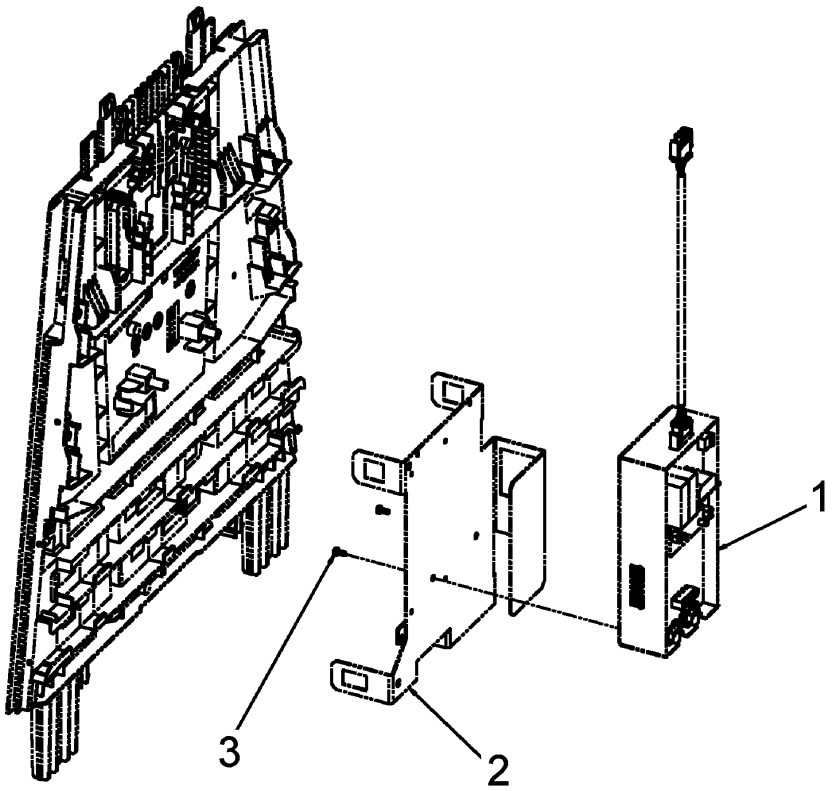

No.	Part Number	Description	Amount
1	WU004898-0001	Switch Wayne connect in-dispenser module	
2	WM042298	Sheet metal support	1
3	WM039822-0001	Screw, pan hd cross, 6-32 x .375 w/ext tooth lock washer	2

5.43 Heater/fan

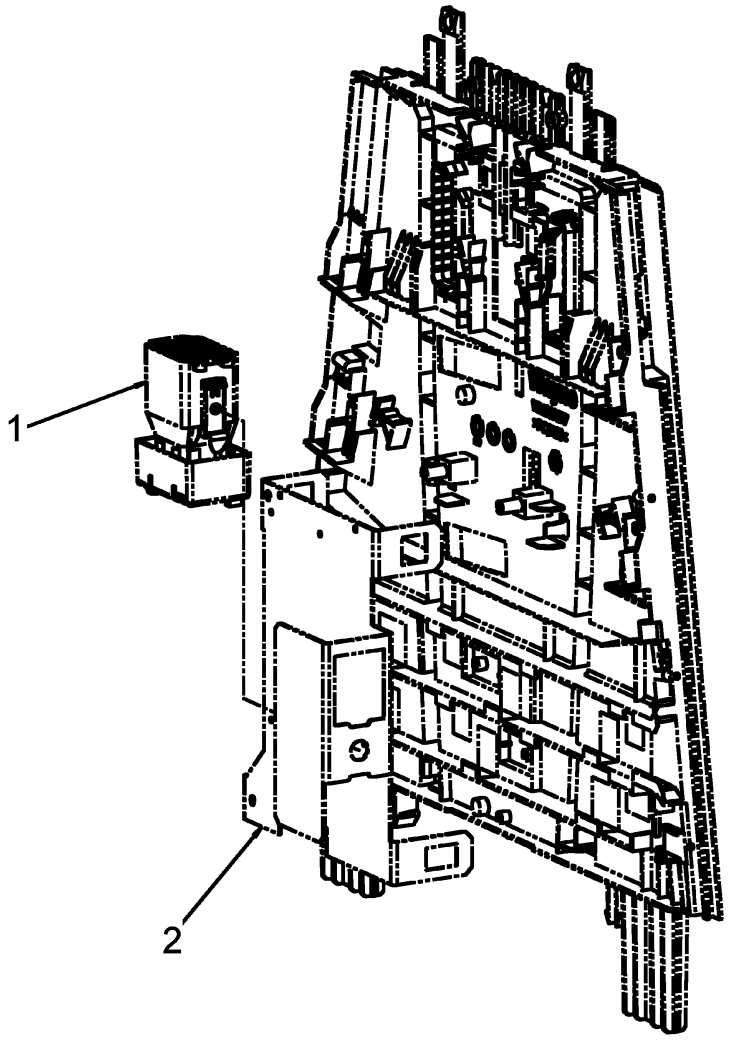

Cables, see page 229.

No.	Part Number	Description	Amount
1		**Heating element with electronic thermostat 290W**	
	WM044405-0001	- 100-120VAC, 24V	1
	WM044405-0002	- 220-240VAC, 24V	1
2	WM042298	Support, U-shape components center	1
-	see page 36	Support, flat EHPM interior side	

5.44 MUX (multiplexor)

Cables, see page 233.

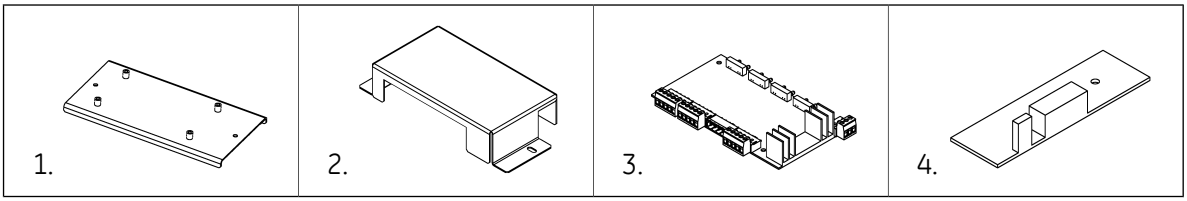

No.	Part Number	Description	Amount
1	WR001731	Support, U-shape, MUX support	1
2	WR001733	Support, U-shape, MUX cover	1
3	WR001735	Multiplex communication board	1
4	WR001736	Current loop board for MUX	1

5.45 Cable harness

Cable harness, see page 227.

5.45.1 Assembly PT bezel

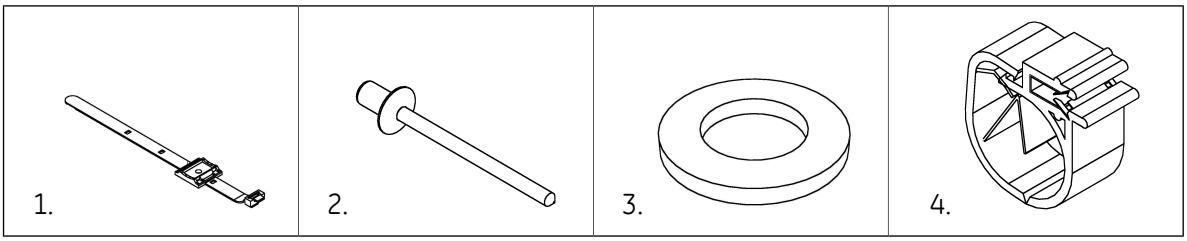

No.	Part Number	Description	Amount
1	WU008226-0001	Clamp cable, 25.4mm dia. max, adhesive M4 (#6) mount	2
2	WM028446-0001	Pop rivet, dome head, 4.0 diameter x 7, grip range 0-3,2	2
3	WB000232-0002	Washer, plain, M4 id=4.3, od=9, t=0.8	2
4	WM031974	Plastic fastener EC27	2

5.46 Switchable motor

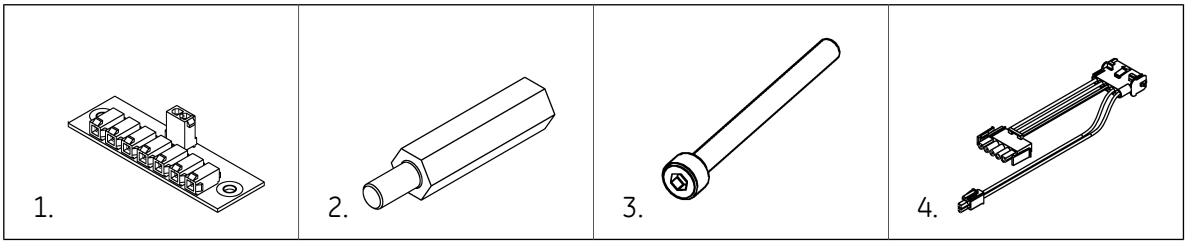

No.	Part Number	Description	Amount
1	WM055471	Board, connection, switchable motor 230/400V	1
2	WB000376-0001	Spacer, blind M4x12, male/female hexagonal	2
3	WB000209-0009	Screw, hexagon socket cap, M4x12	2
4	WM055951-0001	Cable, l=100	1

5.47 High speed board

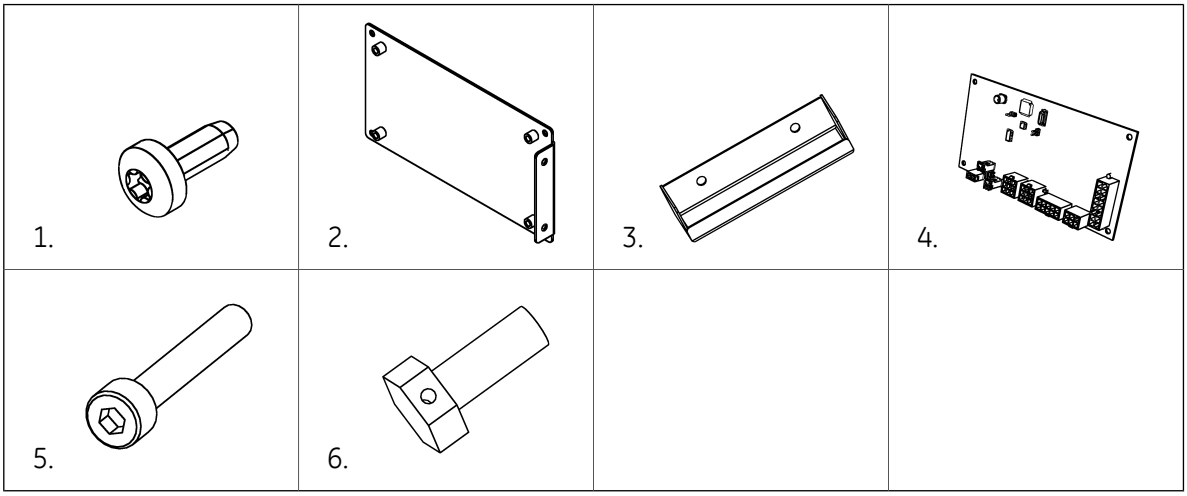

No.	Part Number	Description	Amount
1	WM045308-0002	Taptite screw, Torx, pan head, M4x8	4
2	WM053554	Support flat, adapter for high speed	1
3	WM053659	Support U-shape, switch cover	1
4	WU010435-0003	Board, pulse processing module, modified	1
5	WB000209-0001	Screw, hexagon socket cap, M4x10	4
6	WU010612-0001	Seal screw, hex head, M4	2

6 Hose handling

Hanging hardware see page 213.

Helix 1000: Coupling, hose connector and nozzle boot, see page 181.

6.1 Tube clip

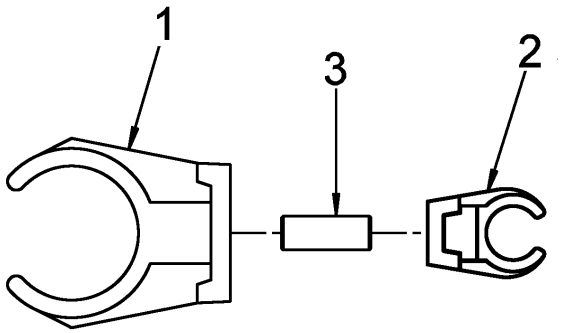

No.	Part Number	Description	Amount
1	WB000346-0002	Clip, for 24 tube, M6 fixing	1
2	WB000346-0004	Clip, for 10 tube, M6 fixing	1
3	WM027467-0001	Set screw, hexagon socket, M6x16, flat point	1

6.2 Nozzle boot

6.2.1 Nozzle boot, H-style

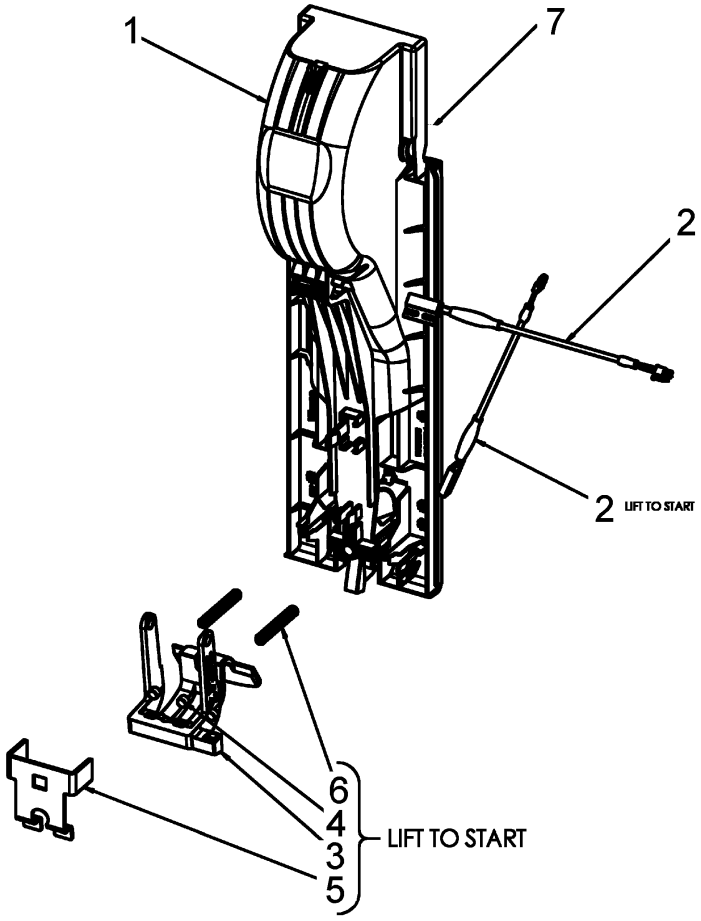

No.	Part Number	Description	Amount
1	WM045780	**Nozzle boot with gasket**	1
	WM041075	- Nozzle boot	1
	WM049824-0001	- Gasket	2
2	WM045692-0001	Switch, magnetic reed 2-wire normally close cable l=1300	2
3	WM045941-0001	Lever LTS snaplock	2
4	WM042009	Magnet block 6x8	3
5	WM041065	LTS bracket	1
6	WM041829	Spring	2
7	WM046400-0001	Flap nozzle boot	

6.2.2 Nozzle boot, Small style

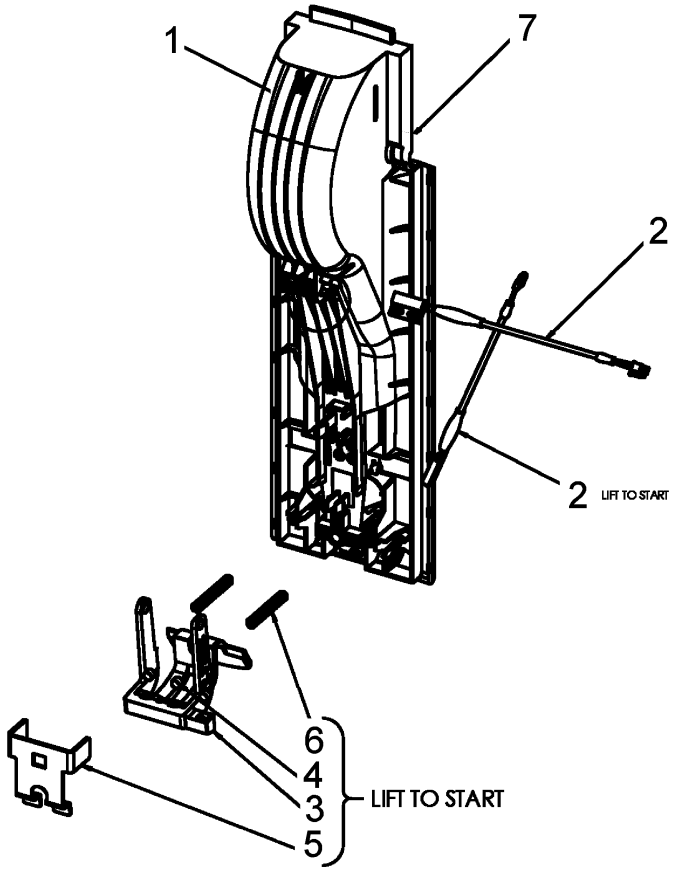

No.	Part Number	Description	Amount
1		**Moulded nozzle boot**	
	WM045804	- Auto-on and lts, island	1
	WM045705	- Roof, with hanger	1
2	WM045692-0001	Switch, magnetic reed 2-wire normally close cable l=1300	1 or 2
3	WM045941-0001	Lever LTS snaplock	1
4	WM041065	LTS bracket	1
5	---	---	
6	WM041829	Spring	2
7	WM046400-0001	Flap nozzle boot	

6.2.3 Nozzle boot Helix 1000

1. 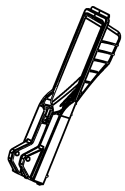	2. 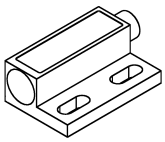		

No.	Part Number	Description	Amount
1		**Nozzle boot island**	
	WM051453-0001	- Without flapper (on picture)	
	WM051453-0002	- Auto-ON , flapper	
2	WM009210-0001	Switch magnetic reed 2-wire normally closed 1.5m cable	

Flapper

1. 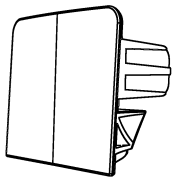	2. 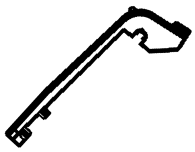	3. 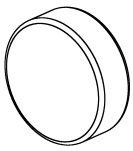	4. 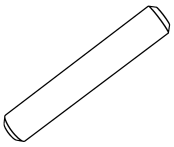
5. 	6. 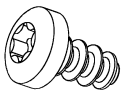	7. 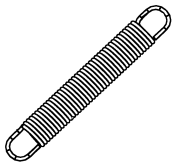	

No.	Part Number	Description	Amount
1	WM050382	Cover nozzle boot	
2	WM050385	Flap actuating flap	
3	WM052934	Magnet, Ø15x5	
4	WM051319	Pin Ø6x35	
5	WM053076	Retaining ring	
6	WM045329-0001	Self tapping screw, torx, pan head	
7	WM054184	Spring, plain	

6.3 Nozzle boot blank off plate

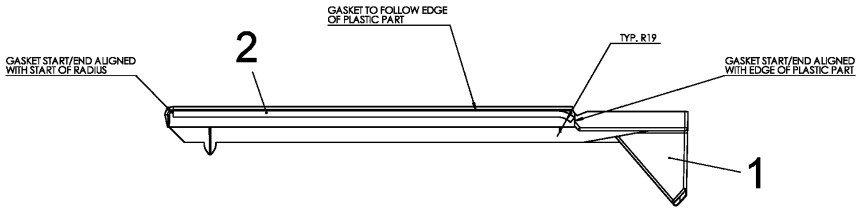

No.	Part Number	Description	Amount
1	WM041133	Blank off panel	
2	WM049824-0001	Gasket	2

6.4 Nozzle boot roof

6.4.1 Nozzle boot roof, wide

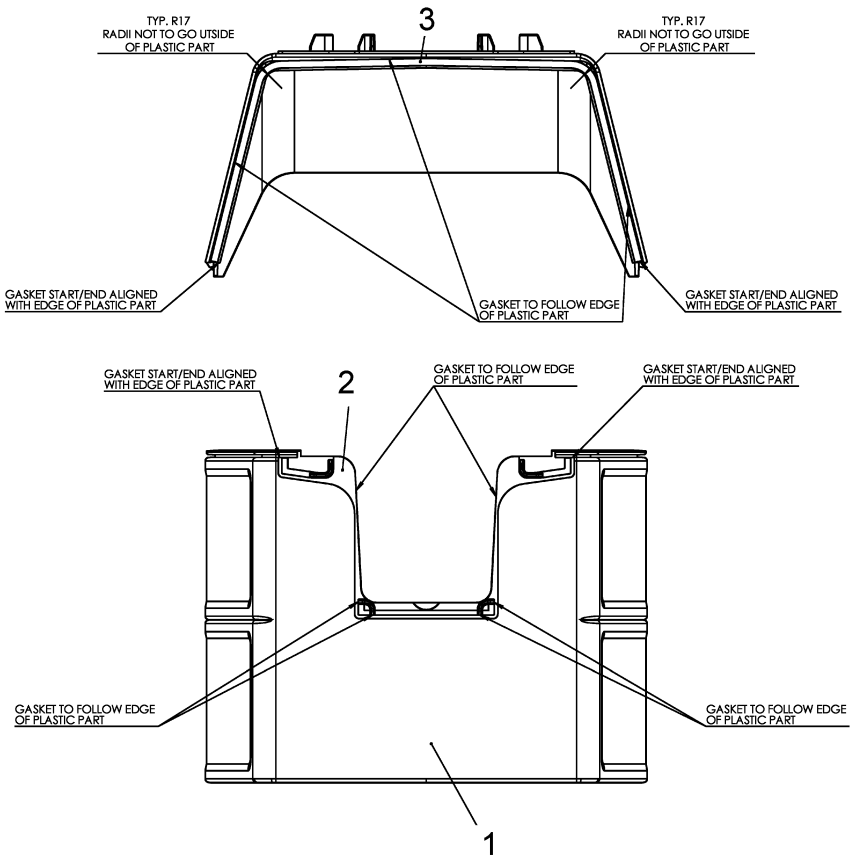

No.	Part Number	Description	Amount
1	WM041370-0001	Nozzle boot roof	
2	WM045686	Gasket	
3	WM049824-0002	Gasket	

6.4.2 Nozzle boot roof, narrow

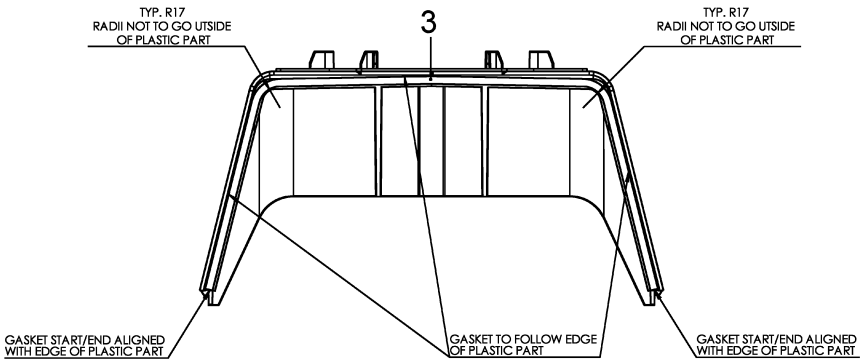

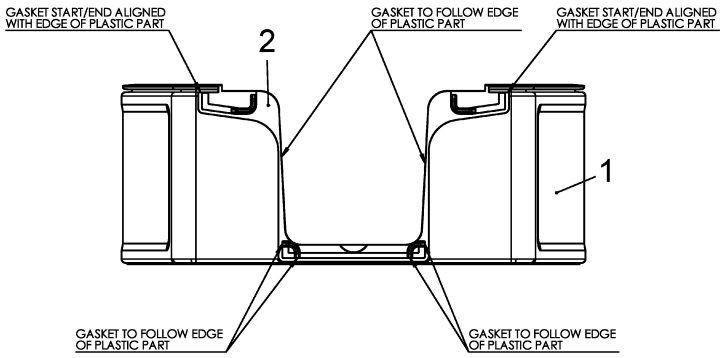

No.	Part Number	Description	Amount
1	WM041370-0002	Nozzle boot roof	
2	WM045686	Gasket	
3	WM049824-0002	Gasket	

6.4.3 Nozzle boot roof, small style

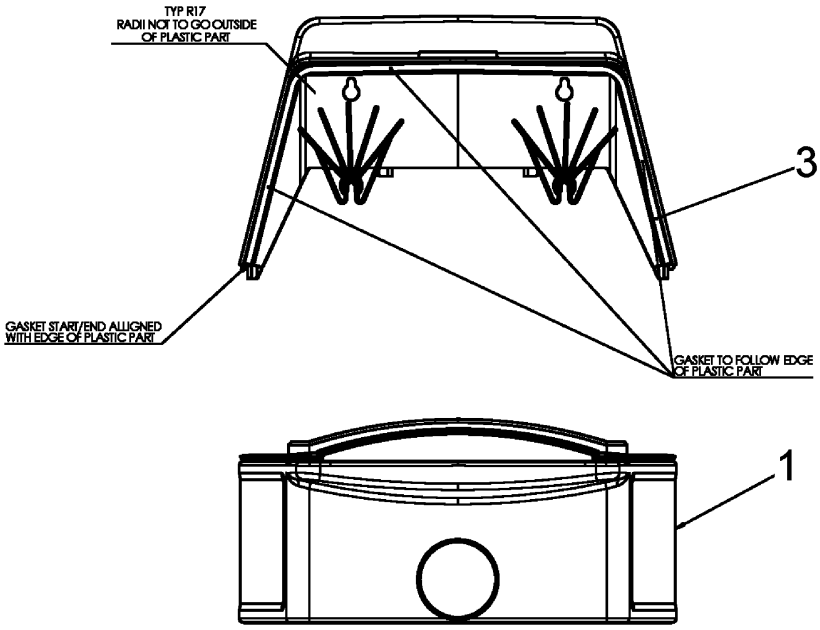

No.	Part Number	Description	Amount
1	WM045705	Moulded, housing nozzle boot roof, with hanger	
3	WM049824-0002	Gasket	

6.5 Top box

6.5.1 Top box wide 4 hoses, 8 hoses and narrow

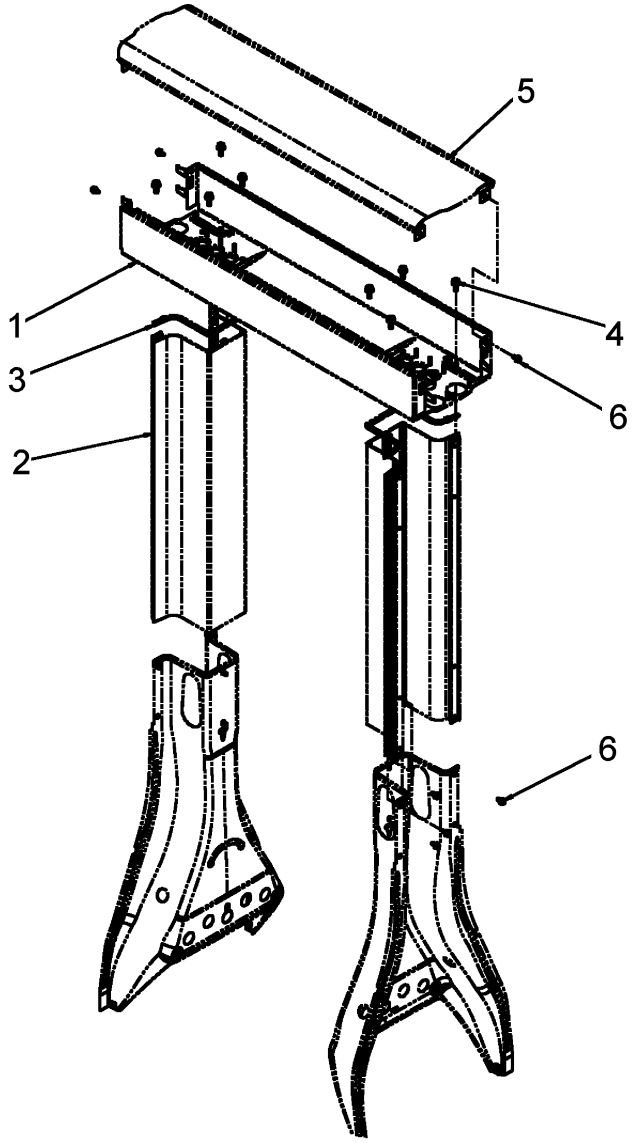

No.	Part Number	Description	Amount
1		**Support, box-shape top box**	
	WM045983-F050	- 4 hoses	1
	WM045984-F050	- 8 hoses	1
	WM045985-F050	- Narrow	1
2	WM046882-F050	Column inner	
3	WM045404	Seal	2
4	WM043586-0001	Taptite screwm hex flange M8x20	8
5		**Cover plate top box**	

No.	Part Number	Description	Amount
	WM046842-F050	- 4 hoses	1
	WM046842-F050	- 8 hoses	1
	WM046846-F050	- Narrow	1
6	WB000300-0002	Taptite screw hex flange M6x1	12

6.5.2 Top box vapor module

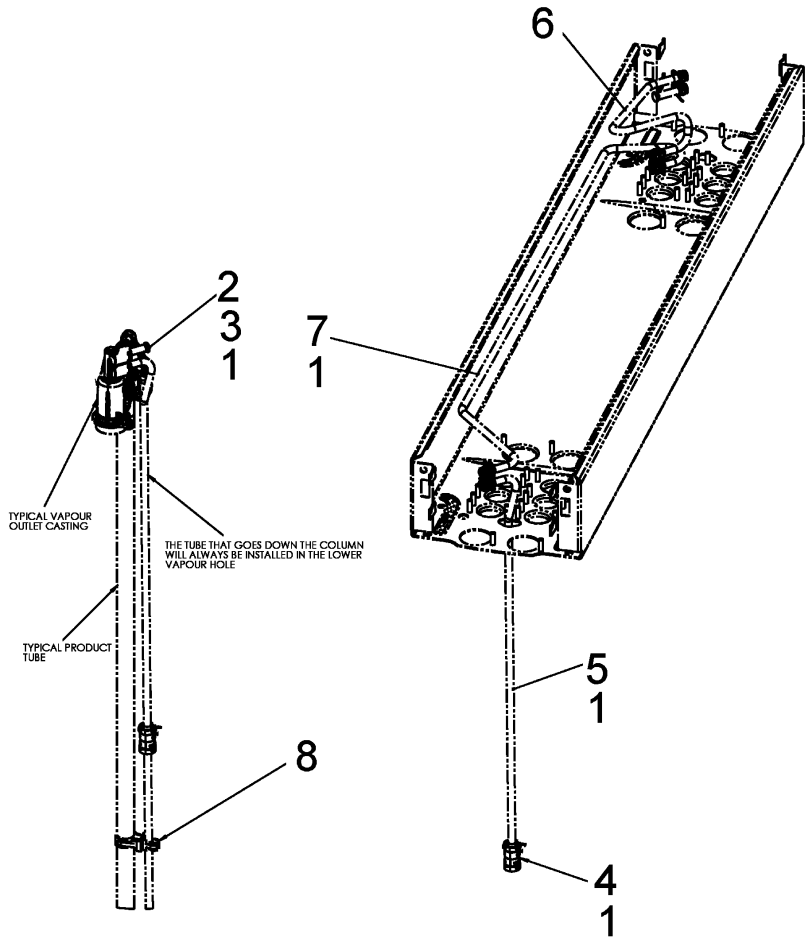

No.	Part Number	Description	Amount
1	WM012100	Pin	
2	WM031399	Plug	
3	WM038241-0001	O-Ring	
4	WM042313	Coupling	
5	WM042401	Tube, vapor	
6	WM042408	Tube, vapor	

No.	Part Number	Description	Amount
7	WM042412	Tube, vapor	
8	WM047426	**Tube Clip**	
	WB000346-0002	- Clip, for 24 tube, M6 fixing	1
	WB000346-0004	- Clip, for 10 tube, M6 fixing	1
	WM027467-0001	- Set screw, hexagon socket, M6 x16, flat point	1

6.6 Outlet casting module

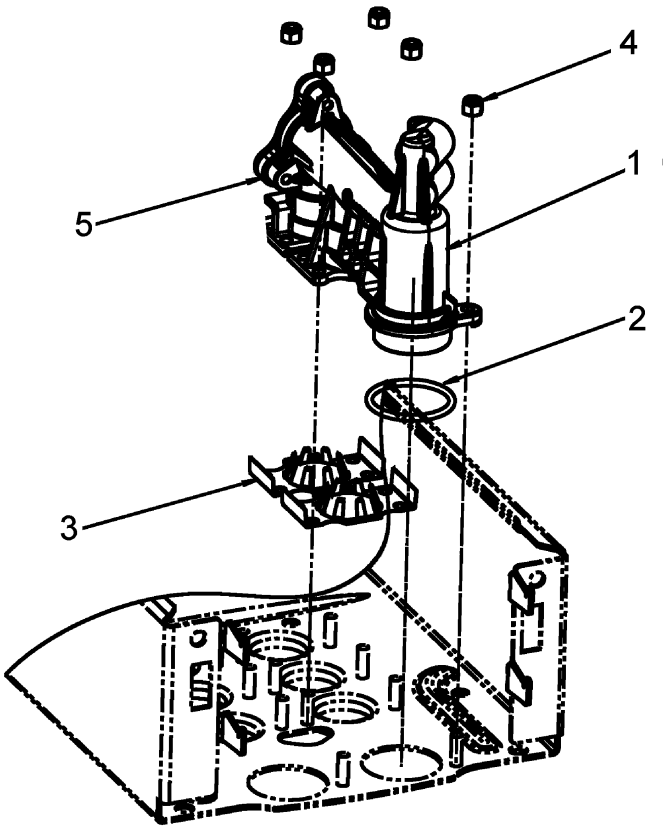

No.	Part Number	Description	Amount
1		**Outlet Casting**	
	WM040588	O-ring t=4, id=26	
	WM040755-0001	Coupling 1 inlet, 3/4" NPT - std	
	WM040755-0002	Coupling 1 inlet, 1" NPT - std	
	WM040755-0003	Coupling 1 inlet, M34 VR - std	
	WM040755-0010	Coupling 1 inlet, 3/4" NPT - impreg.	

No.	Part Number	Description	Amount
	WM040755-0011	Coupling 1 inlet, 1" NPT - impreg.	
	WM040755-0012	Coupling 1 inlet, M34 VR - impreg.	
	WM040755-0019	Coupling 1 inlet, 3/4" NPT - anodized	
	WM040755-0020	Coupling 1 inlet, 1" NPT - anodized	
	WM040755-0021	Coupling 1 inlet, M34 VR - anodized	
	WM040755-0028	Coupling 1 inlet, 3/4" NPT – hard anodized	
	WM040755-0029	Coupling 1 inlet, 1" NPT – hard anodized	
	WM040755-0030	Coupling 1 inlet, 3/4" NPT – anodized+imp	
	WM040755-0031	Coupling 1 inlet, 1" NPT - anodized+impreg.	
	WM040755-0032	Coupling 1 inlet, M34 VR - anodized+impreg.	
	WM040755-0039	Coupling 1 inlet, 3/4" NPT – hard anodized+im-preg.	
	WM040755-0040	Coupling 1 inlet, 1" NPT – hard anodized+im-preg.	
	WM040755-0004	Coupling 2 inlet, 3/4" NPT - std	
	WM040755-0005	Coupling 2 inlet, 1" NPT - std	
	WM040755-0006	Coupling 2 inlet, M34 VR - std	
	WM040755-0013	Coupling 2 inlet, 3/4" NPT - impreg.	
	WM040755-0014	Coupling 2 inlet, 1" NPT - impreg.	
	WM040755-0015	Coupling 2 inlet, M34 VR - impreg.	
	WM040755-0022	Coupling 2 inlet, 3/4" NPT - anodized	
	WM040755-0023	Coupling 2 inlet, 1" NPT - anodized	
	WM040755-0024	Coupling 2 inlet, M34 VR - anodized	
	WM040755-0033	Coupling 2 inlet, 3/4" NPT - anodized+impreg.	
	WM040755-0034	Coupling 2 inlet, 1" NPT - anodized+impreg.	
	WM040755-0035	Coupling 2 inlet, M34 VR - anodized+impreg.	
	WM040755-0007	Coupling 3 inlet, 3/4" NPT - std	
	WM040755-0008	Coupling 3 inlet, 1" NPT - std	
	WM040755-0009	Coupling 3 inlet, M34 VR - std	
	WM040755-0016	Coupling 3 inlet, 3/4" NPT - impreg	
	WM040755-0017	Coupling 3 inlet, 1" NPT - impreg.	

No.	Part Number	Description	Amount
	WM040755-0018	Coupling 3 inlet, M34 VR – impreg.	
	WM040755-0025	Coupling 3 inlet, 3/4" NPT - anodized	
	WM040755-0026	Coupling 3 inlet, 1" NPT - anodized	
	WM040755-0027	Coupling 3 inlet, M34 VR – anodized	
	WM040755-0036	Coupling 3 inleT, 3/4" NPT - anodized+impreg.	
	WM040755-0037	Coupling 3 inlet, 1" NPT - anodized+impreg.	
	WM040755-0038	Coupling 3 inlet, M34 VR – anodized+impreg.	
2	WM045405	O-ring t=3,5; id=43	1
3	WM040393	Clip	1 - 3
4	WB000229-0003	Lock nut, M6	3, 5, 7
5	WM040588	O-ring t=4, id=26	1

6.7 Hose handling module

6.7.1 Hose handling module H-style

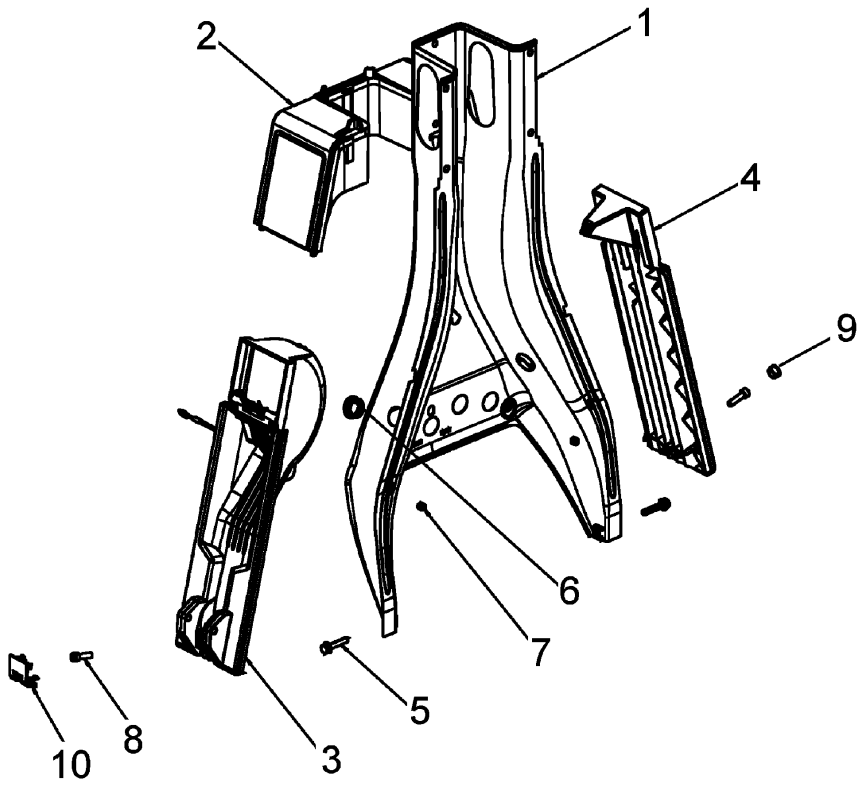

No.	Part Number	Description	Amount
1	WM041034	Column support	2

No.	Part Number	Description	Amount
2		**Nozzle boot roof with gasket**	
	WM045830-0001	- Wide	2
	WM045830-0002	- Narrow	2
3	WM04306376	Nozzle Boot	
4	WM046400-0001	Flap nozzle boot	
5	WM045957	Blank nozzle panel	
6	WM043586-0002	Screw M8x40 Taptite	4
7	WM042015	Edge protector	4
8	WB000229-0003	Lock nut M3	
9	WB000212-0004	Screw M8x30	
10	WM040251	Plug blank panel	
11	WM047260	Blank nozzle panel, moulded cover nozzle boot	

6.8 H-style hose retraction

6.8.1 Structure - H-style hose retraction

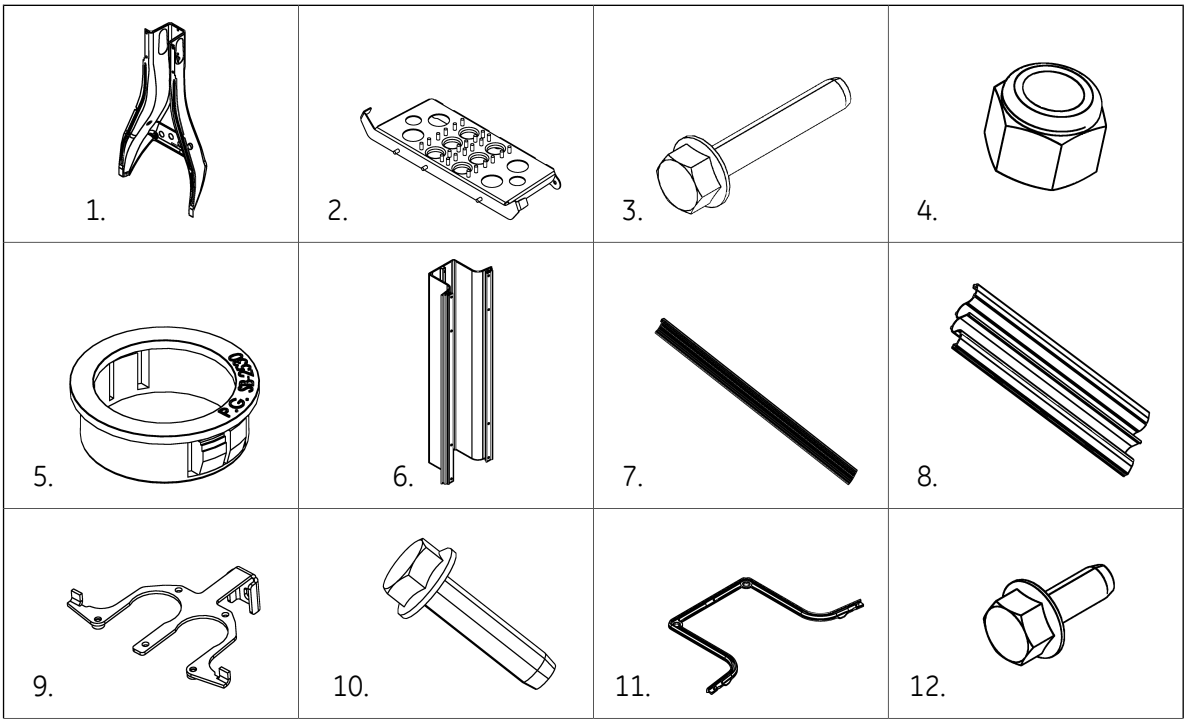

13. 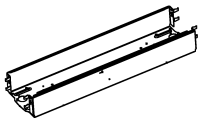	14. 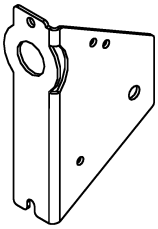	15. 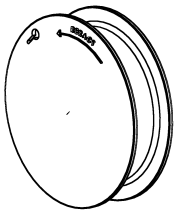	16. 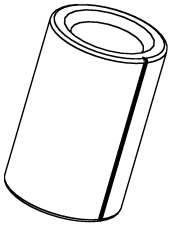
17. 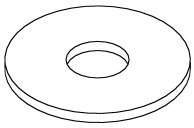	18. 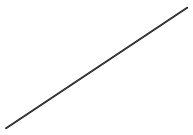	19. 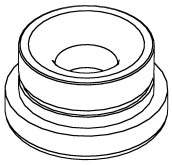	20. 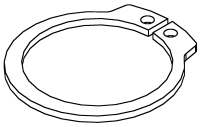
21. 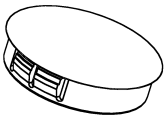	22. 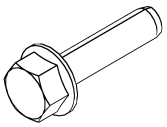	23. 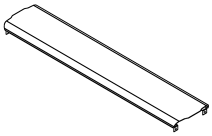	24. 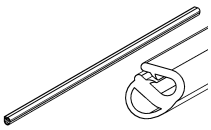
25. 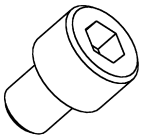			

No.	Part Number	Description	Amount ¿
1	WM041034	Column support	
2	WM041543	Support, box shape hose connector, retraction	
3	WM043586-0002	Taptite screw hexagon flange, M8x40	
4	WB000229-0003	Lock nut, M6	
5	WM042015	Grommet hole dia. 30 mm, T= 1-3,1mm	
6		**Column inner**	
	WM046882-F050	- std, l=778 mm, grey F050	
	WM050898-F050	- l=776 mm, hose retraction, painting instruction	
	WM051027-F050	- l=776 mm, hose retraction, one hole, painting instruction	
7	WM044501-0001	Profile edge protector column l=738,5	
8	WM050863-F050	Column, outer, retraction, l=738,5, painting instruction	
9	WM044489	Support, U-shape bottom, column	

No.	Part Number	Description	Amount ¿
10	WM051725	Taptite screw, hexagon flange, M5x20	
11	WM045404	Profile sealing	
12	WB000300-0002	Screw, hex head with flange, M6x12 taptite	
13		**Support, box shape top box retraction**	
	WM050801-F050	- Narrow, painting instruction	
	WM050803-F050	- Wide 4, painting instruction	
	WM050851-F005	- Wide 8, painting instruction	
14	WM039643	Support, L-shape retraction reel	
15	WM001585	Retractor reel	
16	WM039648	Cable socket splice, solis para 12-10	
17	WB000627-0004	Washer, plain, M3, large, id=3.2, od=9, t=0.8	
18	WM039649	Cord retraction reel	
19	WM039659	Bushing guide cord	
20	WM039661	Retaining ring, external shaft=25 dia., id=23,2, t=1.2	
21	WM040161	Plug dome, dia=45mm, t=1,2 - 3,2mm	
22	WM043586-0001	Taptite screw hexagon flange, M8x20	
23		**Cover plate top box cover**	
	WM046842-F050	- Wide, grey F050	
	WM046846-F050	- Narrow, grey F050	
24	WM044285-0001	Gasket grip range 1.0 - 2.0 thk, l=300 mm	
25	WB000212-0004	Screw, hexagon socket cap, M8x30	

6.8.2 Hose connection - H-style hose retraction

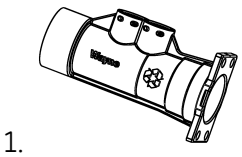
1.

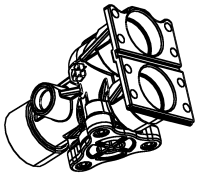
2.

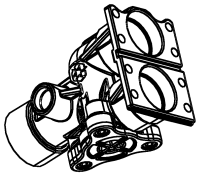
3.

No.	Part Number	Description	Amount
1		**Coupling 1 inlet**	

No.	Part Number	Description	Amount
	WM041939-0001	- 3/4" NPT - std	
	WM041939-0002	- 1" NPT - std	
	WM041939-0003	- M34 VR - std	
	WM041939-0004	- 3/4" NPT - impreg.	
	WM041939-0005	- 1" NPT - impreg.	
	WM041939-0006	- M34 VR - impreg.	
	WM041939-0007	- 3/4" NPT - anodized	
	WM041939-0008	- 1" NPT - anodized	
	WM041939-0009	- M34 VR - anodized	
	WM041939-0010	- 3/4" NPT – h anodized	
	WM041939-0011	- 1" NPT – h anodized	
	WM041939-0012	- 3/4" NPT – anodized+impreg.	
	WM041939-0013	- 1" NPT - anodized+impreg.	
	WM041939-0014	- M34 VR - anodized+impreg.	
	WM041939-0015	- 3/4" NPT – h anodized+impreg.	
	WM041939-0016	- 1" NPT – h anodized+impreg.	
2		**Coupling 2 inlet**	
	WM049823-0001	- 3/4" NPT - std	
	WM049823-0002	- 1" NPT - std	
	WM049823-0003	- M34 VR - std	
	WM049823-0007	- 3/4" NPT - impreg.	
	WM049823-0008	- 1" NPT - impreg.	
	WM049823-0009	- M34 VR - impreg.	
	WM049823-0013	- 3/4" NPT - anodized	
	WM049823-0014	- 1" NPT - anodized	
	WM049823-0015	- M34 VR - anodized	
	WM049823-0019	- 3/4" NPT - anodized+impreg.	
	WM049823-0020	- 1" NPT - anodized+impreg.	
	WM049823-0021	- M34 VR - anodized+impreg.	
3		**Coupling 3 inlet**	

No.	Part Number	Description	Amount
	WM049823-0004	- 3/4" NPT - std	
	WM049823-0005	- 1" NPT - std	
	WM049823-0006	- M34 VR - std	
	WM049823-0010	- 3/4" NPT - impreg.	
	WM049823-0011	- 1" NPT - impreg.	
	WM049823-0012	- M34 VR – impreg.	
	WM049823-0016	- 3/4" NPT - anodized	
	WM049823-0017	- 1" NPT - anodized	
	WM049823-0018	- 3 inlet, M34 VR – anodized	
	WM049823-0022	- 3 inlet, 3/4" NPT - anodized+impreg.	
	WM049823-0023	- 3 inlet, 1" NPT - anodized+impreg.	
	WM049823-0024	- 3 inlet, M34 VR – anodized+impreg.	

6.8.3 Vapor recovery - H-style hose retraction

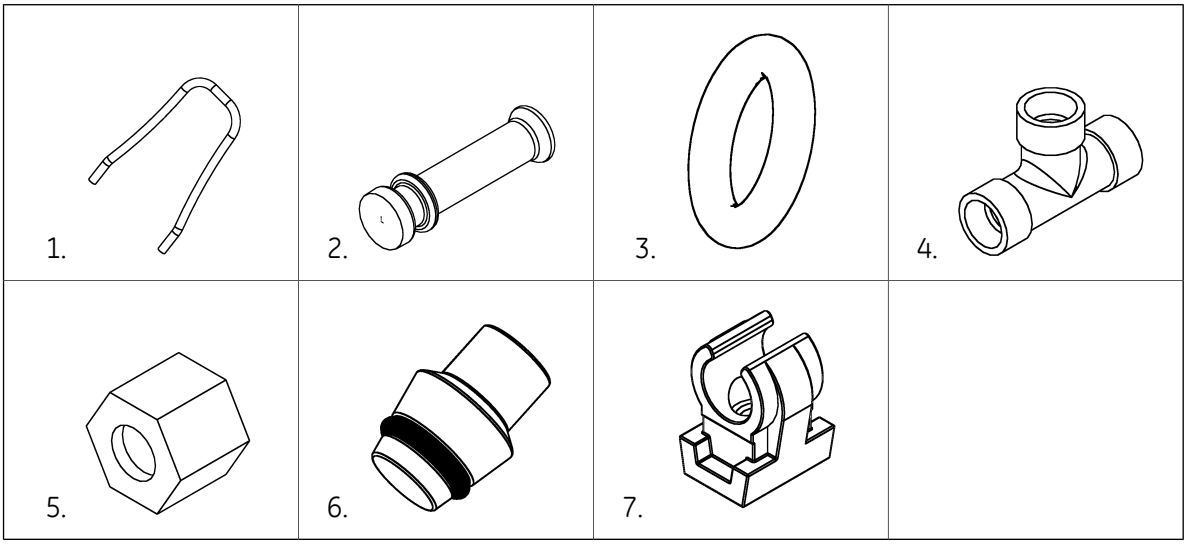

No.	Part Number	Description	Amount
1	WM012100	Pin	
2	WM031399	Plug D=10, L=50	
3	WM038241-0001	O-ring T=3.0 ID=9.5	
4	WM051554	Coupling, T-coupling d=10	
5	WM020448	Nut for 10mm diameter tubing	
6	WM020598	Plug d=10	

No.	Part Number	Description	Amount
7	WB000346-0004	Clip, for 10 tube, M6 fixing	
	WM050727	Tube, vapour, side A id/od 8/10 narrow (three inlet - T-coupling)	
	WM050732	Tube, vapour, side A id/od 8/10 narrow (one inlet - T-coupling)	
	WM050734	Tube, vapour, side A id/od 8/10 narrow (two inlet - T-coupling)	
	WM050736	Tube, vapour, side A id/od 8/10 narrow (one inlet - T-coupling)	
	WM050738	Tube, vapour, side A id/od 8/10 wide (three inlet - T-coupling)	
	WM050740	Tube, vapour, side A id/od 8/10 wide (one inlet - T-coupling)	
	WM050742	Tube, vapour, side A id/od 8/10 wide (two inlet - T-coupling)	
	WM050744	Tube, vapour, side A id/od 8/10 wide (one inlet - T-coupling)	
	WM050746	T0ube, vapour, side A id/od 8/10 wide (one inlet - T-coupling)	
	WM050749	Tube, vapour, side A id/od 8/10 wide (two inlet - T-coupling)	
	WM050751	Tube, vapour, side B id/od 8/10 narrow (one inlet - T-coupling)	
	WM050753	Tube, vapour, side B id/od 8/10 narrow (three inlet - T-coupling)	
	WM050755	Tube, vapour, side B id/od 8/10 narrow (one inlet - T-coupling)	
	WM050757	Tube, vapour, side B id/od 8/10 narrow (two inlet - T-coupling)	
	WM050759	Tube, vapour, side B id/od 8/10 wide (one inlet - T-coupling)	
	WM050761	Tube, vapour, side B id/od 8/10 wide (two inlet - T-coupling)	
	WM050763	Tube, vapour, side B id/od 8/10 wide (three inlet - T-coupling)	

No.	Part Number	Description	Amount
	WM050765	Tube, vapour, side B id/od 8/10 wide (one inlet - T-coupling)	
	WM050767	Tube, vapour, side B id/od 8/10 wide (two inlet - T-coupling)	
	WM050769	Tube, vapour, side B id/od 8/10 wide (one inlet - T-coupling)	
	WM051748	Tube, vapour, side A id/od 8/10 wide (one inlet - T-coupling)	
	WM051755	Tube, vapour, side B id/od 8/10 wide (one inlet - T-coupling)	
	WM051757	Tube, vapour, side A id/od 8/10 wide (two inlet - T-coupling)	
	WM051759	Tube, vapour, side B id/od 8/10 wide (two inlet - T-coupling)	
	WM050774	Tube, vapour id/od 8/10 (one inlet - one inlet)	
	WM050776	Tube, vapour id/od 8/10 (one inlet - two inlet)	

6.8.4 Hose outer outlet - H-style hose retraction

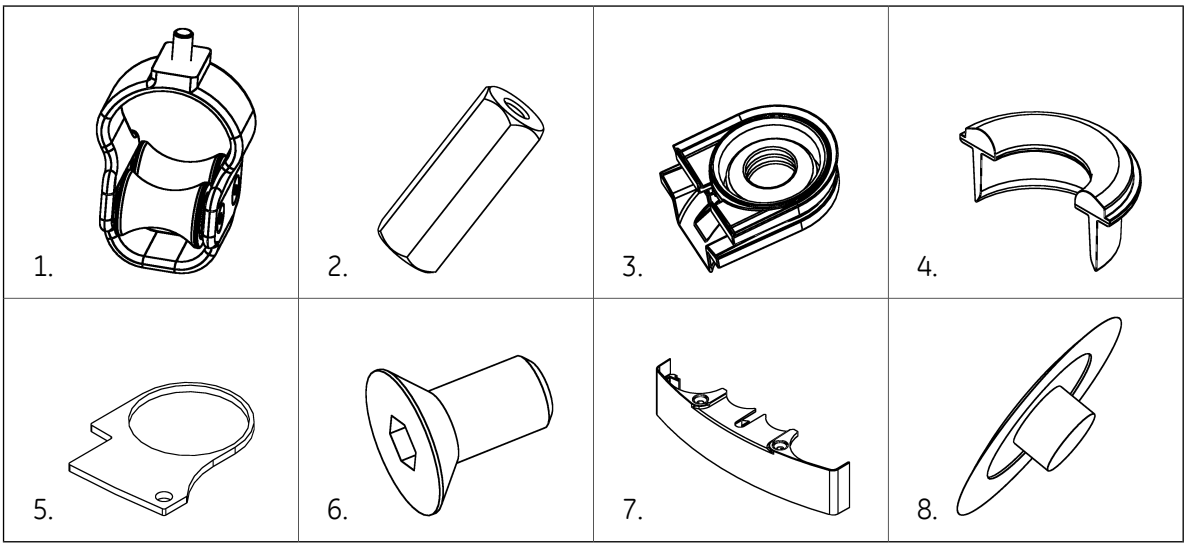

No.	Part Number	Description	Amount
1	WM018918-0001	Ring with pulley, hose handling M8	
2	WM051532	Coupling, straight cord	
3		**Seal hose outlet**	
	WM039713-0001	- Sealed	

No.	Part Number	Description	Amount
	WM039713-0002	- 16 mm	
	WM039713-0003	- 19mm, 21mm, VR	
	WM039713-0004	- 25mm	
4		**Spacer hose outlet**	
	WM051353-0001	- 16mm	
	WM051353-0002	- 21mm	
	WM051353-0003	- 25mm	
5	WM051720-F050	Support flat, gasket support, single painting instruction	
6	WB000647-0003	Screw, csk socket cap, M6x20	
7	WM050907-F050	Moulded cover, painting instruction	
8	WM051367	Cap hexagon socket screw, t25, d=14,5, RAL7021	

6.8.5 Hose inner outlet - H-style hose retraction

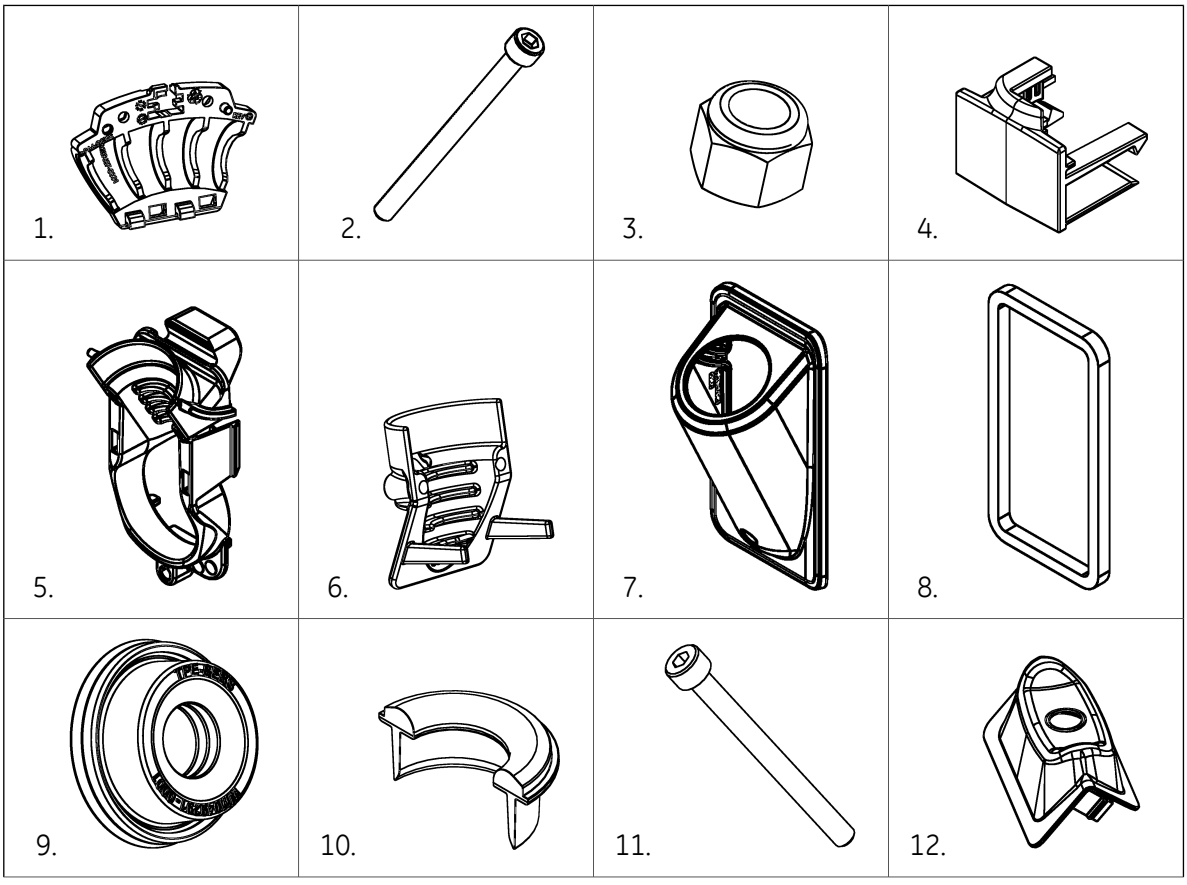

13. 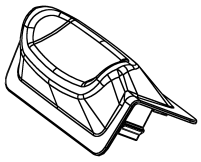	14. 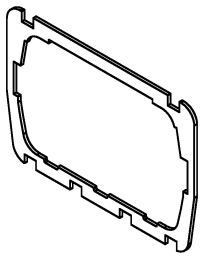	15. 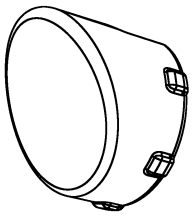	

No.	Part Number	Description	Amount
1		**Clamp hose retraction**	
	WM039687-0001	- id=24,5	
	WM039687-0002	- id=27,1	
	WM039687-0003	- id=29,8	
2	WB000211-0001	Screw, hexagon socket cap, M6x16	
3	WB000229-0003	Lock nut, M6	
4	WM049836	Plug hose clamp	
5		**Clamp hose outlet, inner**	
	WM048631-0001	- Ø16	
	WM048631-0002	- Ø19-21	
6		**Clamp hose outlet, inner**	
	WM048633-0001	- Ø16	
	WM048633-0002	- Ø19-21	
7		**Cover hose outlet**	
	WM048641-0001	- Left	
	WM048641-0002	- Right	
8	WM048644	Gasket	
9		**Seal hose outlet**	
	WM049291-0001	- Ø16	
	WM049291-0002	- Ø19-21	
10		**Spacer hose outlet**	
	WM051353-0001	- 16mm	
	WM051353-0002	- 21mm	
11		**Screw, hexagon socket cap**	
	WB000209-0002	- M4x20	

No.	Part Number	Description	Amount
	WB000209-0004	- M4x35	
12	WM045514-0001	Moulded, cover guide	
13	WM045514-0002	Moulded, cover (blind)	
14	WM049652	Gasket	
15	WM049472	Plug	

6.9 Helix 6000, Hose Handling

6.9.1 Assembly instruction, HHR

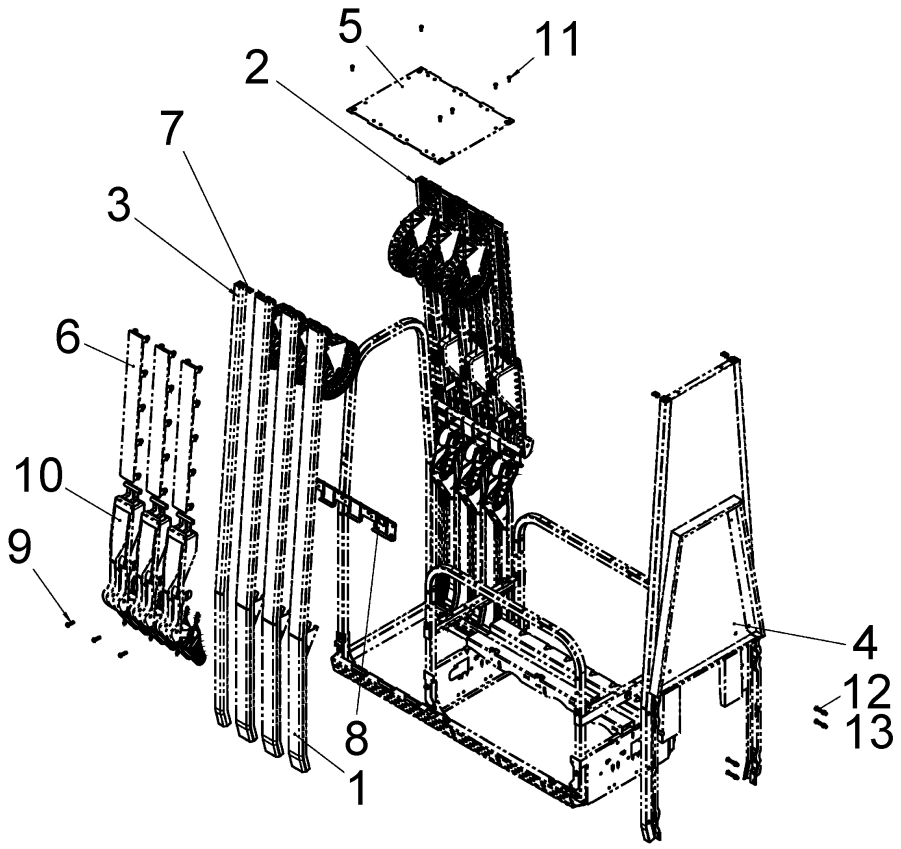

No.	Part Number	Description	Amount
1	WM053155	Column, HHR (see also page 127)	1-10
2	WM053883-A040	Corner column, side B, outwards	1
3	WM053884-A040	Corner column, side A, outwards	1
4	WM054703	Panel (see also page 129)	1
5	WM051850-F050	Top panel, hose handling, 3 modules, grey	1
6	WM051842-W001	Side panel, h=1976	1

No.	Part Number	Description	Amount
7	WM054908-0002	Side panel, l=646,5	1
8	WM050318	Nut, speed nut, M6	4
9	WM046559-0003	Support, U-shape, 3 hose	2
10	WB000370-0001	Screw, hexagon socket button, M8,x30, with tuflok locking patch	1-10
11	WM055145	Nozzle boot, auto on, HHR (see also page 128)	1-10

6.9.2 Column, HHR

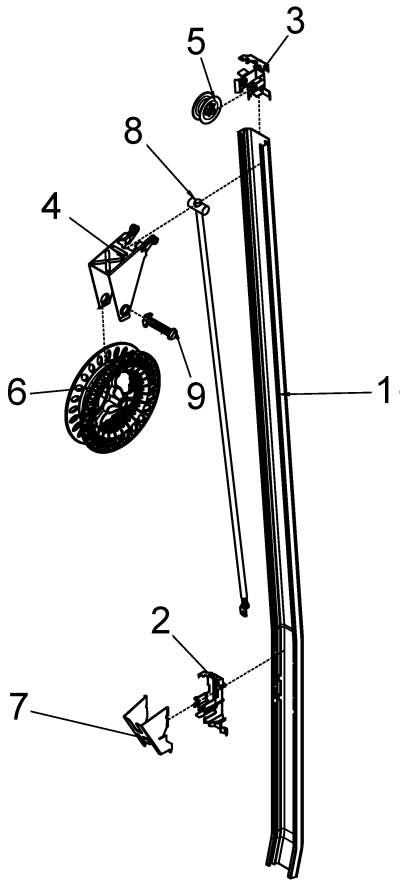

No.	Part Number	Description	Amount
1	WM053877-A040	Column, HHR	1
2	WM052709	Support, U-shape	1
3	WM051710	Support, box shape Helix	1
4	WM051785	Support, box shape assembly	1
5	WM028144	Wheel d=55	1
6	WM028140	Wheel d=239	1

No.	Part Number	Description	Amount
7	WM052132	Support, U-shape	1
8	WM029945	Cord, l=1150	1
9	WM044481	Spring, pin, diam=15, l=70	1

6.9.3 Nozzle boot, auto on, HHR

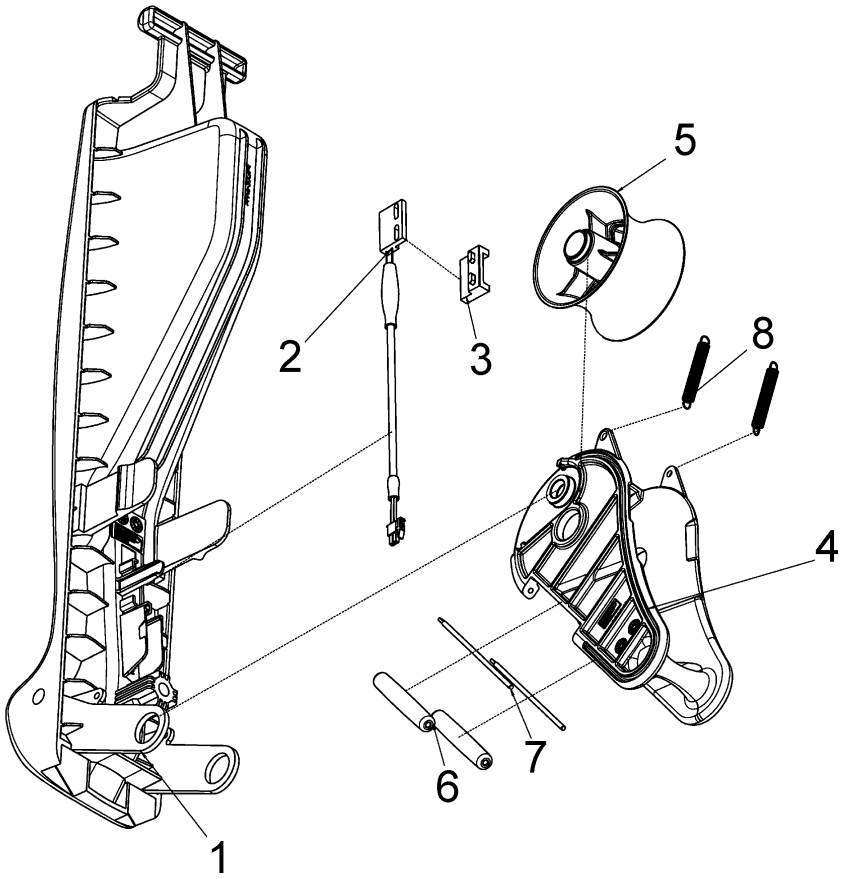

No.	Part Number	Description	Amount
1	WM054916-0002	Nozzle boot, auto-on	1
2	WM045692-0001	Cable magnetic reed 2-wire normally open cable l=1300	1
3	WM054424	Moulded, noozle holder	1
4	WM028141	Bracket, wheel, nozzle boot	1
5	WM025573	Wheel, d=85	1
6	WM028145	Bushing, roller, l=66	2
7	WM030068	Lock pin, l=100	2
8	WM030544	Spring, l0=47,6	2

6.9.4 Panel, HHR

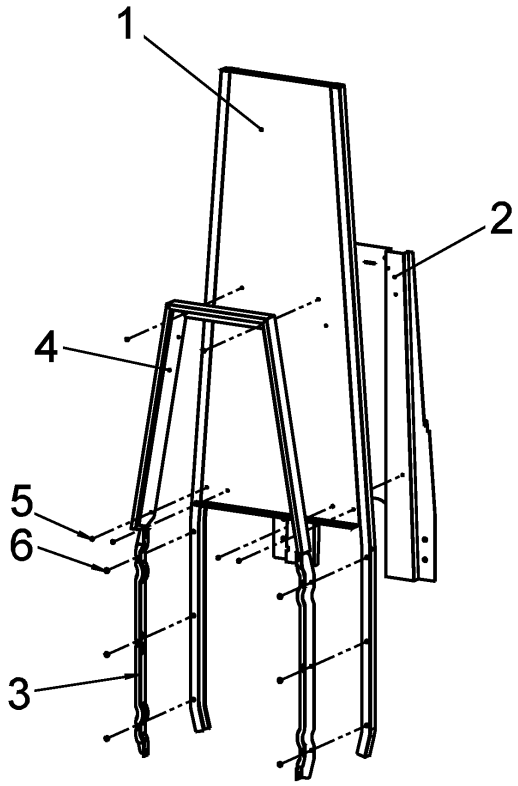

No.	Part Number	Description	Amount
1	WM054499-A040	Side panel h=1295,5, silver	1
2	WM046287	Support, U-shape l=970	1
3	WM046999-F050	Deep drawn side panel assembly bracket, gray	2
4	WM052168-F050	Panel h=686,2, grey	1
5	WT000398-0001	Pop rivet, dome head, 4.0 diameter x8, grip range 1.5-3.5 closed end	6
6	WM044310-0001	Pop rivet, dome head 6 diameter x10, grip range 2-4 mm	6

6.9.5 Assembly instruction, HH

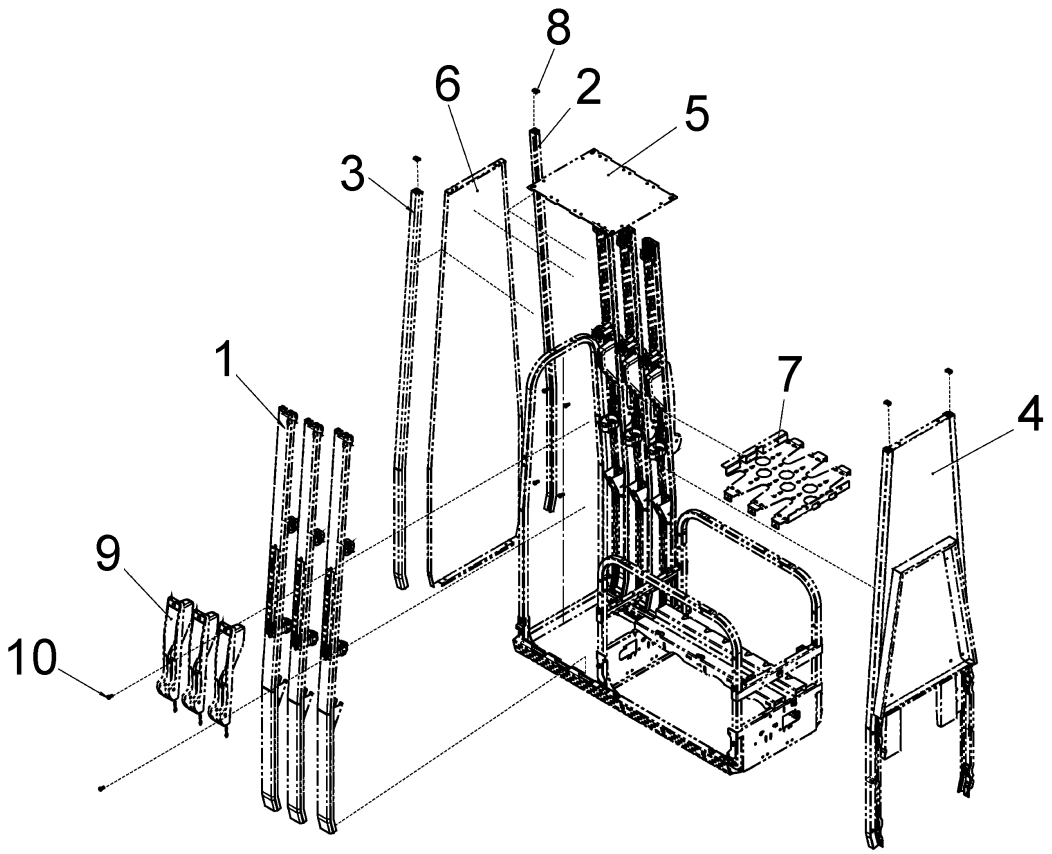

No.	Part Number	Description	Amount
1	WM053196	Column, HH (see also page 131)	1-10
2	WM053883-A040	Corner column, side B, outwards	1
3	WM053884-A040	Corner column, side A, outwards	1
4	WM054703	Panel (see also page 133)	1
5	WM051850-F050	Top panel, hose handling, 3 modules, grey	1
6	WM051842-W001	Side panel, h=1976	1
7	WM054700-F050	Painting instruction, support, flat, 3 hose	1
8	WM050318	Nut, speed nut, M6	4
9	WM055217	Nozzle boot, auto on, HH (see also page 132)	1-10
10	WB000370	Screw, hexagon socket button, M8x20, with tuflok locking patch	2-20

6.9.6 Column, HH

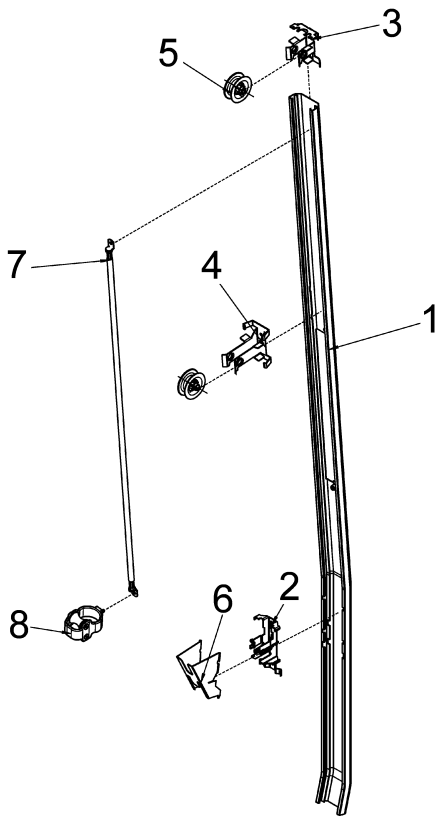

No.	Part Number	Description	Amount
1	WM053878-A040	Column, HH	1
2	WM052709	Support, U-shape	1
3	WM051710	Support, box shape	1
4	WM051905	Support, U-shape	1
5	WM028144	Wheel d=55	2
6	WM052132	Support, U-shape	1
7	WM032347	Cord, l=1000	1
8	WM018918	Ring, with pulley, hose handling	1

6.9.7 Nozzle boot, auto on, HH

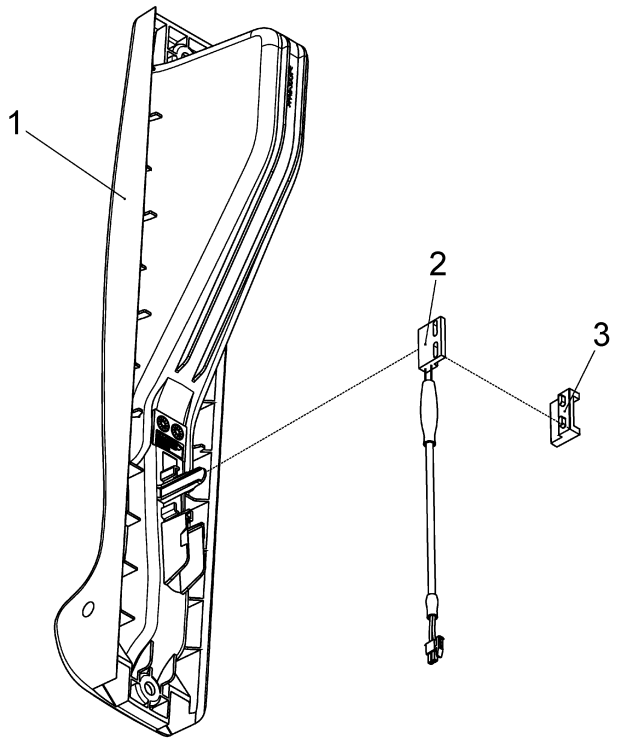

No.	Part Number	Description	Amount
1	WM054917-0002	Nozzle boot, auto-on	1
2	WM045692-0001	Cable magnetic reed 2-wire normally open cable l=1300	1
3	WM054424	Moulded noozle holder	1

6.9.8 Panel, HH

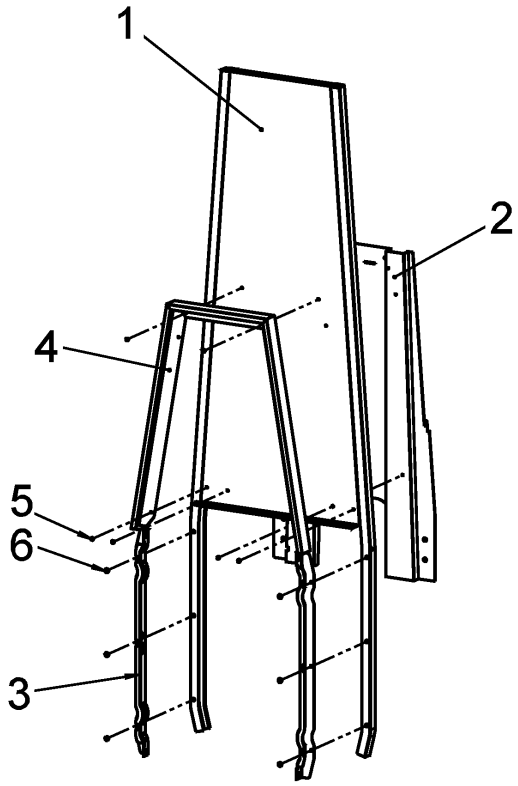

No.	Part Number	Description	Amount
1	WM054499-A040	Side panel h=1295,5, silver	1
2	WM046287	Support, U-shape l=970	1
3	WM046999-F050	Deep drawn side panel assembly bracket, gray	2
4	WM052168-F050	Panel h=686,2, grey	1
5	WT000398-0001	Pop rivet, dome head, 4.0 diameter x8, grip range 1.5-3.5 closed end	6
6	WM044310-0001	Pop rivet, dome head 6 diameter x10, grip range 2-4 mm	6

6.9.9 VR

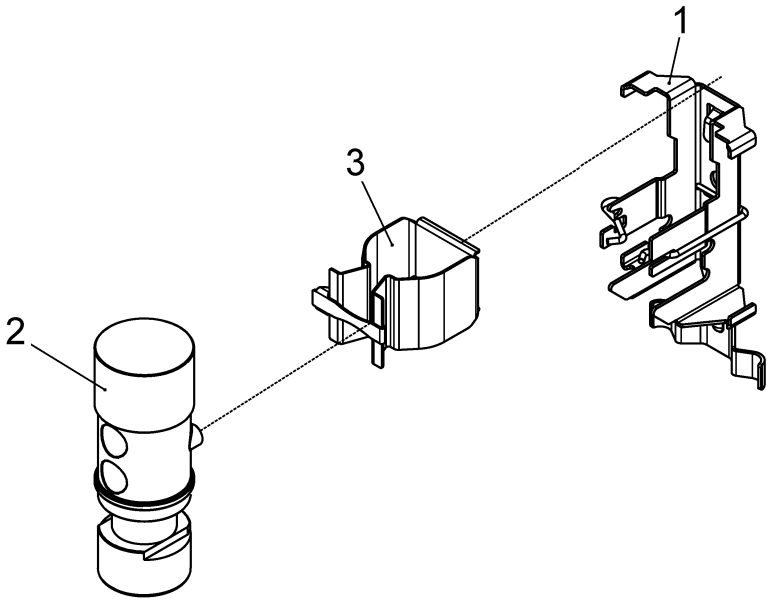

No.	Part Number	Description	Amount
1	WM052709	Support, U-shape	1
2	WM028989	Coupling, hose with VR	1
3	WM028990	Clamp	1

6.9.10 Column with cover plates, HH

No.	Part Number	Description	Amount
1	WM053878-A040	Column, HH	
2	WM051710	Support, box shape	
3	WM051905	Support, U-shape	
4	WM052202	Support, flat	
5	WM052709	Support, U-shape	
6	WM024633	Cable socket dim=6,5	
7	WM028144	Wheel d=55	
8	WM029937	Hook l=44	
9	WM029940	Cord l=1150	
10	WM029943	Ring cord	

7 Hydraulic cabinet - tubes and couplings

7.1 Framework Helix 2000, 4000, 5000

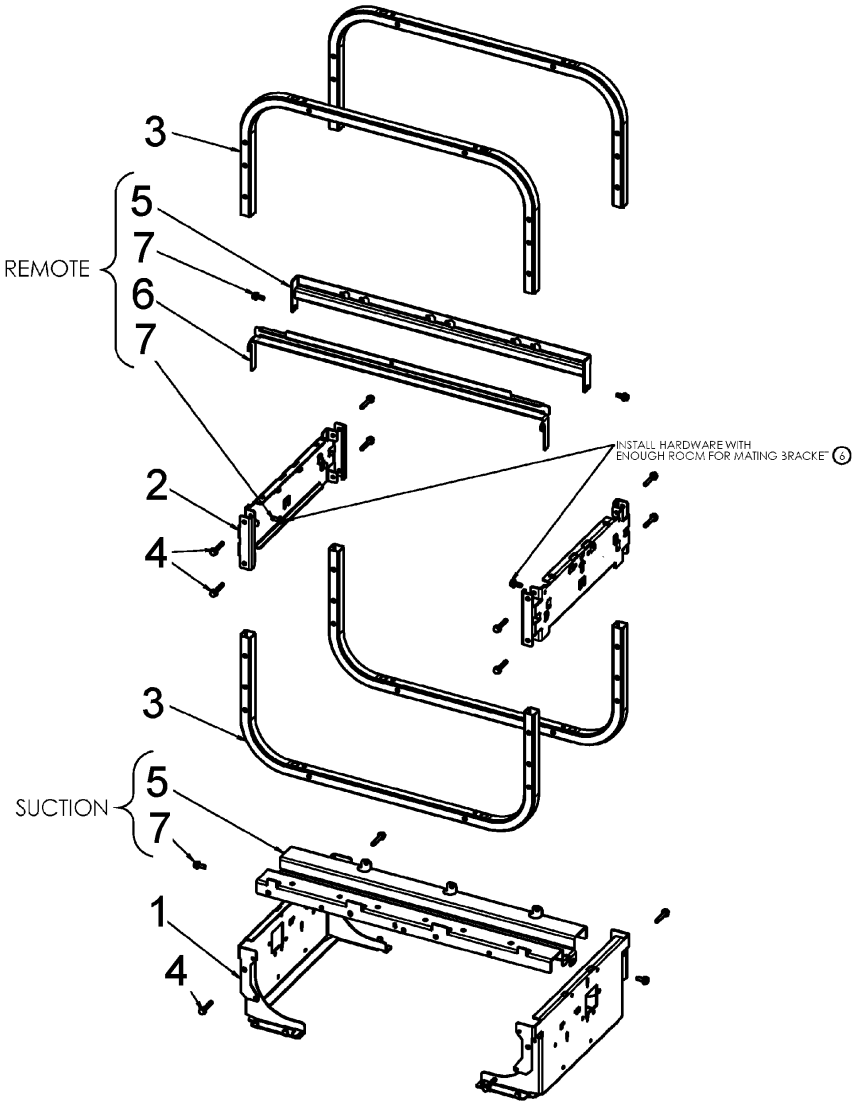

No.	Part Number	Description	Amount
1	WM040095	Support, box shape lower attachment	2
2	WM040093	Support, box shape connection beam	2
3		**Profile square tube**	
	WM040075-0001	- Narrow	2
	WM040075-0002	- Wide	2
4	WM043586-0002	Taptite screw hexagon flange, M8x45	12
5		**Support hydraulics**	

No.	Part Number	Description	Amount
	WM040123-0001	- Remote, narrow	1
	WM045109-0001	- Suction, narrow	1
	WM040123-0002	- Remote, wide	1
	WM045109-0002	- Suction, wide	1
6		**Support hydraulics**	
	WM040125-0001	- Remote, narrow	1
	WM040125-0002	- Remote, wide	1
7	WM043586-0001	Taptite screw hexagon flange, M8x20	suc. 2 rem. 4

7.2 Framework Helix 1000

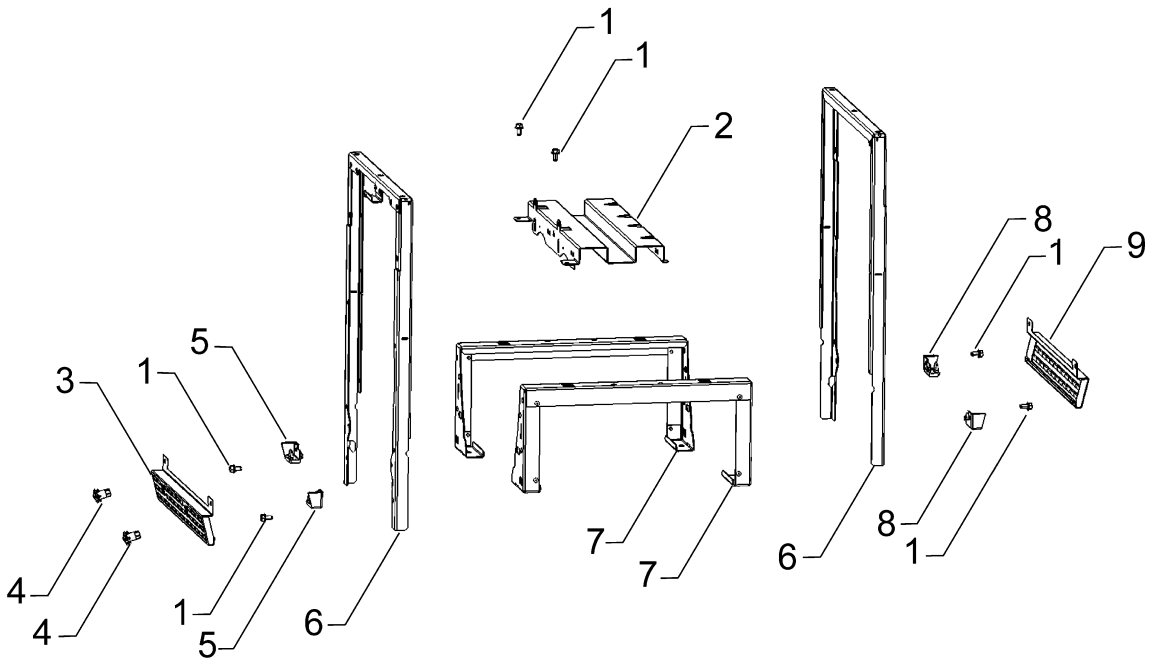

No.	Part Number	Description	Amount
1	WM043586	Taptite screw, hexagon flange, M8x16	6
2	WM049872	Support, U-shape	1
3	WM052878	Cover plate, base	suction 1 remote 0
4	WM009161	Plug with strainer, for air venting	suction 2 remote 0

No.	Part Number	Description	Amount
5	WM047368-0002	Front panel guide pin right	2
6	WM051480	Support, box shape	2
7	WM049874	Support, box shape hydraulic side	2
8	WM047368-0001	Front panel guide pin left	2
9	WM052863-F050	Cover plate, base	suction 1 remote 2

7.3 Framework Helix 6000

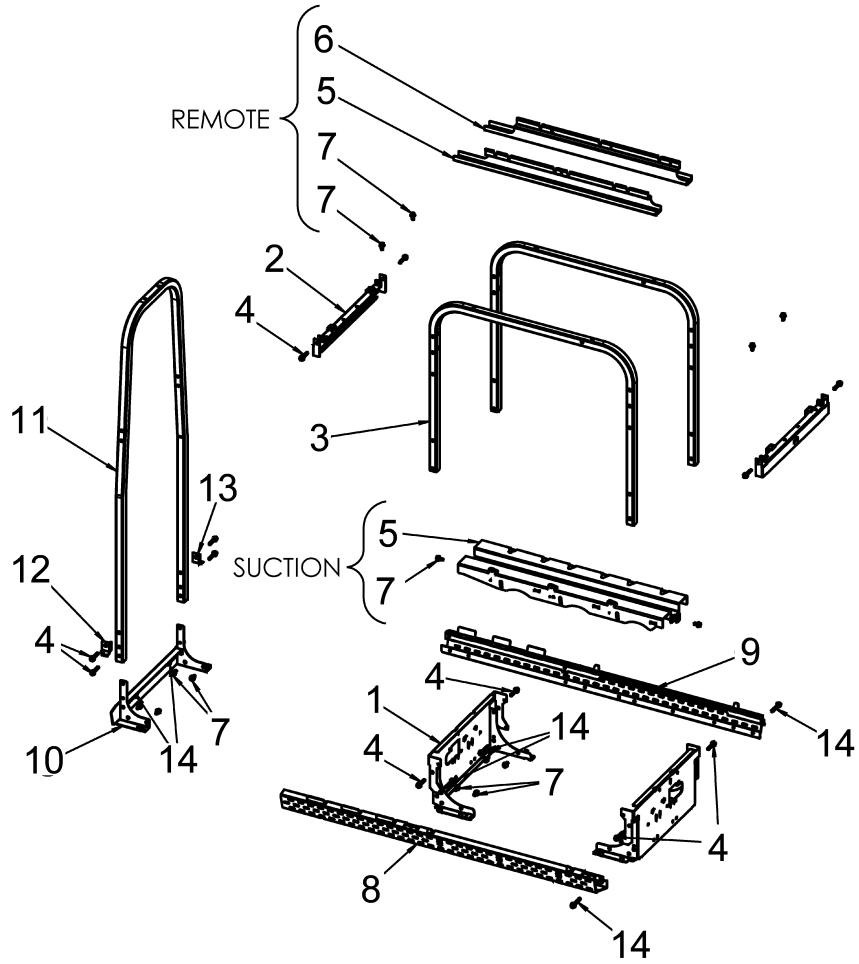

No.	Part Number	Description	Amount
1	WM040095	Support, box shape lower attachment	2
2	WM052492	Support, box shape connection beam	2
3		**Profile square tube**	
	WM051305-0001	- Narrow	2

No.	Part Number	Description	Amount
	WM051305-0002	- Wide	2
	WM051305-0003	- Extra wide	2
4	WM043586-0002	Taptite screw hexagon flange, M8x40	12
5, 6		**Support, remote hydraulics**	
	WM052942-0001	- Narrow, A-side	1
	WM052944-0001	- Narrow, B-side	1
	WM052942-0002	- Wide, A-side	1
	WM052944-0002	- Wide, B-side	1
	WM052942-0003	- Extra wide, A-side	1
	WM052944-0003	- Extra wide, B-side	1
		Support, suction hydraulics	
	WM045109-0001	- Narrow	1
	WM045109-0003	- Wide	1
	WM045109-0004	- Extra wide	1
7	WM043586-0003	Taptite screw hexagon flange, M8x16	remote: 14 suction: 16
8		**Base, A-side**	
	WM052764-F050	- Narrow	1
	WM052770-F050	- Wide	1
	WM052780-F050	- Extra wide	1
9		**Base, B-side**	
	WM052765-F050	- Narrow	1
	WM052771-F050	- Wide	1
	WM052781-F050	- Extra wide	1
10	WM052169-F050	Support, box shape lower attachment, grey F050	1
11	WM046510	Profile square tube, back	1
12	WM051866-0001	Support, L-shape A-side c-style support corner	1
13	WM051866-0002	Support, L-shape B-side C-style support corner	1
14	WM043586-0004	Taptite screw hexagon flange, M8x50	6

7.4 Vapor Barrier

7.4.1 Vapor barrier, H-style

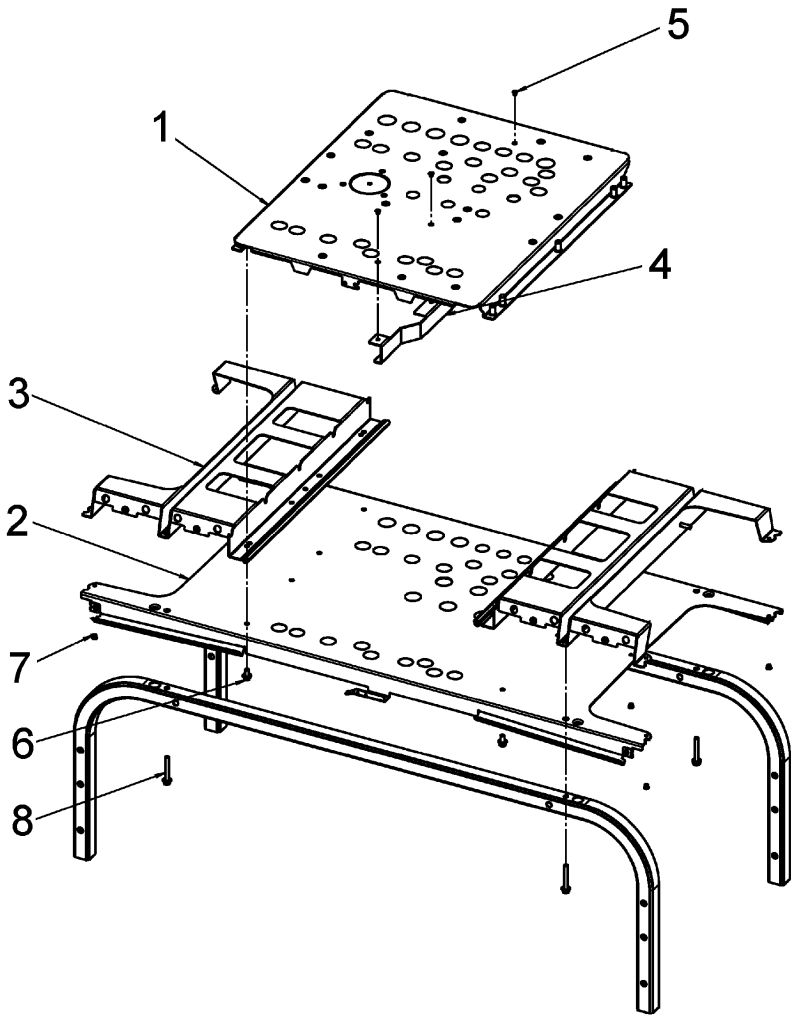

No.	Part Number	Description	Amount
1		**Support, box shape LEE bottom**	
	WM039330-0001	- Wide & Narrow, UL (on picture)	1
	WM039729	- Wide & Narrow, IEC	1
2		**Support, U-shape hydraulic top**	
	WM042331-0001	- Wide, UL (on picture)	1
	WM042331-0002	- Narrow, UL	1
	WM042331-0003	- Wide, IEC	1
	WM042331-0004	- Narrow, IEC	1
3		**Support, box shape guide rail**	
	WM040197	- Wide, UL and IEC (on picture)	2

No.	Part Number	Description	Amount
	WM040195	- Narrow, UL and IEC	2
4	WM043276	Support, U-shape vapor barrier	1
5	WB000251-0001	Pop rivet, CSK head, 4.0 diameter x9, grip range 2.0-4.4, closed end	3
6	WM019873-0001	Screw, hex head, M6x12, with flange	7
7	WM028446-0001	Pop rivet, dome head, 4.0 diameter x7, grip range 0-3,2	wi. 6 nar. 4
8	WM019873-0003	Screw, hex head, M6x45, with flange	4

7.4.2 Vapor barrier, Helix 2000 (small style)

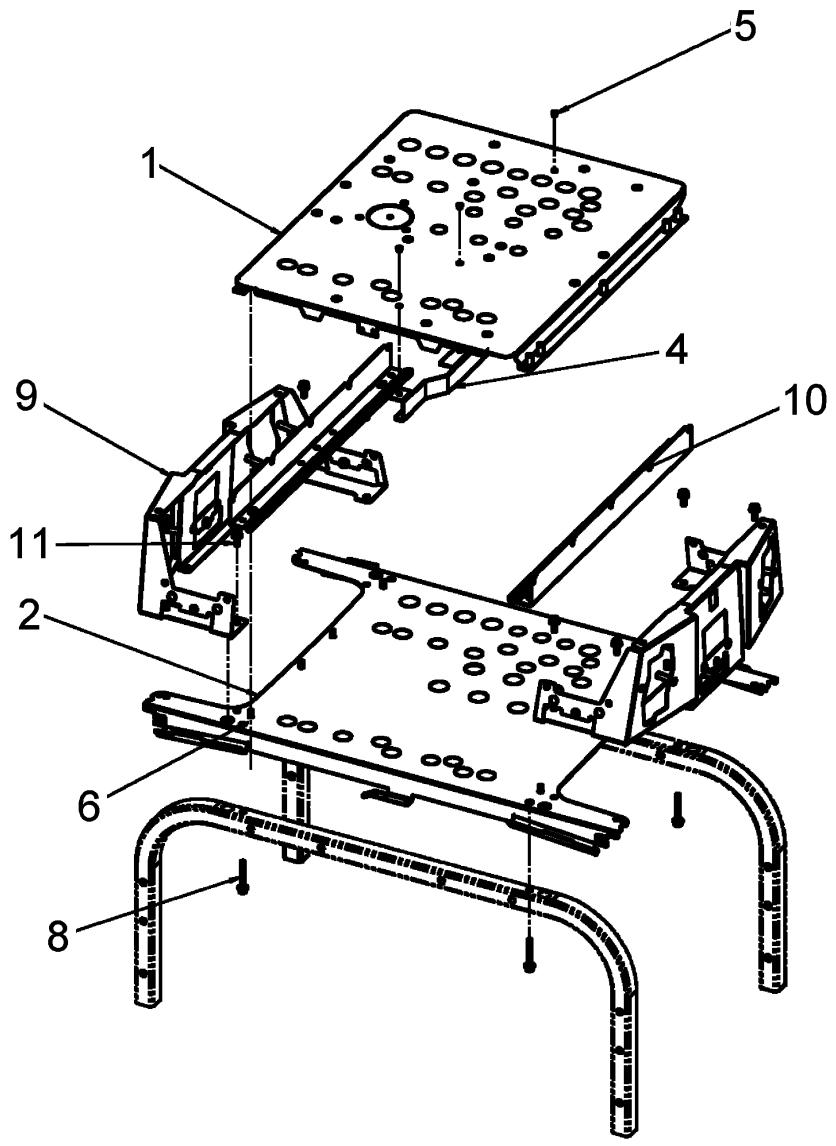

No.	Part Number	Description	Amount
1		**Support, box shape LEE bottom**	
	WM039330-0001	- Small style, UL (on picture)	1
	WM039729	- Small style, IEC	1
2		**Support, U-shape hydraulic top**	
	WM042331-0002	- Small style, UL	1
	WM042331-0004	- Small style, IEC	1
3		**Support, box shape guide rail**	
	---	---	---
4	WM043276	Support, U-shape vapor barrier	1
5	WB000251-0001	Pop rivet, CSK head, 4.0 diameter x9, grip rangE 2.0 - 4.4, closed end	3
6	WM019873-0001	Screw, hex head, M6x12, with flange	7
7	---	---	
8	WM019873-0003	Screw, hex head, M6x45, with flange	4
9	WM045835	Support, box shape hose connector, Small style	2
10	WM045837	Support, L-shape electronic head, Small style	2
11	WB000300-0001	Taptite screw, hexagon flange, M6x16, Small style	8

7.4.3 Vapor barrier, Helix 6000

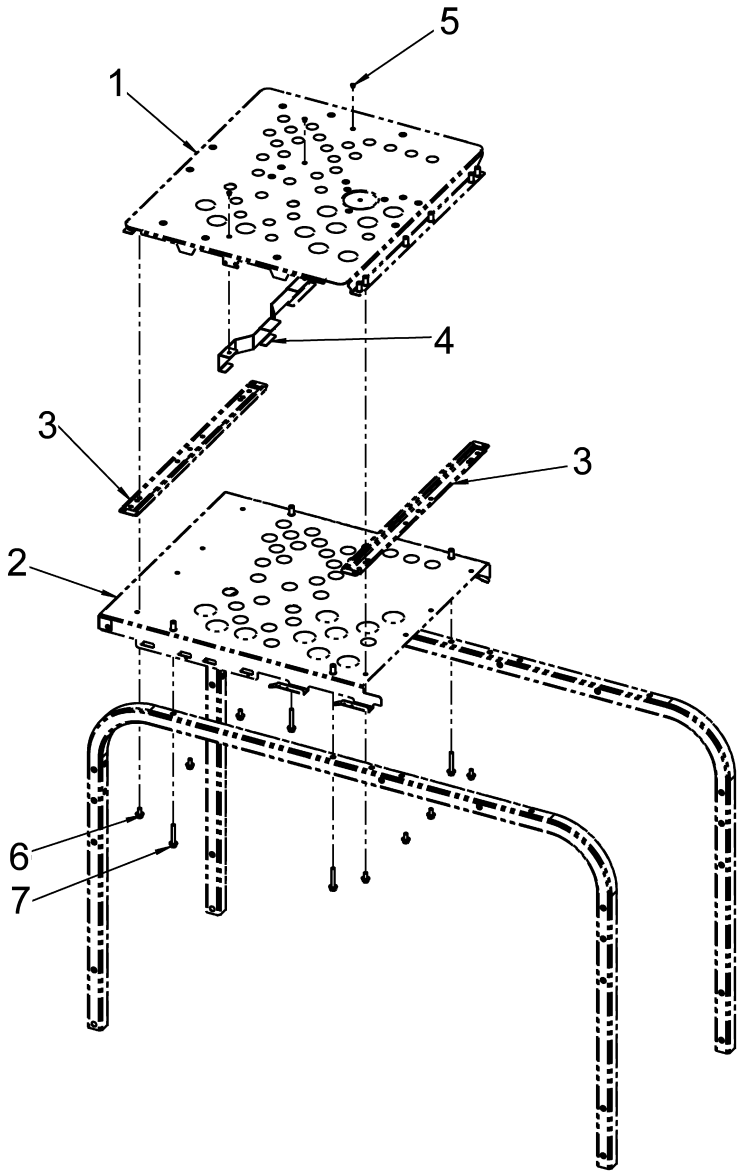

No.	Part Number	Description	Amount
1	WM050670-F050	Support, box shape LEE bottom IEC, grey, F050	1
2	WM054119-F050	Support, U-shape, hydraulic top panel, grey, F050	1
3	WM051348	Support, L-shape electronic head C-style	2
4	WM043276	Support, U-shape vapour barrier	1
5	WB000251-0001	Pop rivet, CSK head, 4.0 diameter x 9, grip range 2.0-4.4, closed end	3
6	WM019873-0001	Screw, hex head, M6x12, with flange	7

No.	Part Number	Description	Amount
7	WM019873-0004	Screw, hex head, M6 x 12, with flange	4

7.5 Hydraulic module

7.5.1 Hydraulic module, remote

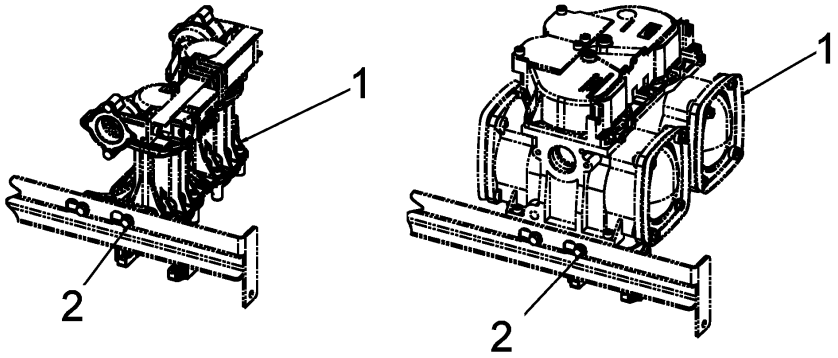

No.	Part Number	Description	Amount
1		**Combined unit**	
	WU007305-0001	- Remote inlet and meter, double sided, FS	
	WU007305-0002	- Remote inlet and meter, double sided, FS, ATC	
	WU007305-0003	- Remote inlet and meter, single A, FS	
	WU007305-0004	- Remote inlet and meter, single A, FS, ATC	
	WU007305-0005	- Remote inlet and meter, double sided, UREA	
	WU007305-0006	- Remote inlet and mMeter, single A, UREA	
	WU007315-0001	- Remote inlet, meter and pulser, dome low, double sided	
	WU007315-0002	- Remote inlet, meter and pulser, dome low, double sided, UL	
	WU007315-0003	- Remote inlet, meter and pulser, dome low, double sided ethanol	
	WU007315-0004	- Remote inlet, meter and pulser, dome low, double sided ethanol, UL	
	WU007315-0005	- Remote Inlet, meter and pulser, dome low, single A, ethanol	
	WU007315-0006	- Remote inlet, meter and pulser, dome low, single A, wthanol, UL	

No.	Part Number	Description	Amount
	WU007315-0007	- Remote inlet, meter and pulser, dome low, single B, ethanol	
	WU007315-0008	- Remote inlet, meter and pulser, dome low, single B, ethanol, UL	
	WU007311-0001	- Remote inlet, meter and pulser, dome low, double sided	
	WU007311-0002	- Remote inlet, meter and pulser, dome low, double sided, UL	
	WU007311-0003	- Remote inlet, meter and pulser, dome low, single A	
	WU007311-0004	- Remote inlet, meter and pulser, dome low, single A, UL	
	WU007311-0005	- Remote inlet, meter and pulser, dome low, single B	
	WU007311-0006	- Remote inlet, meter and pulser, dome low, single B, UL	
2	WM019873-0001	Screw, hex head, M6x12, with flange	2

7.5.2 Hydraulic module, suction, incl. motor

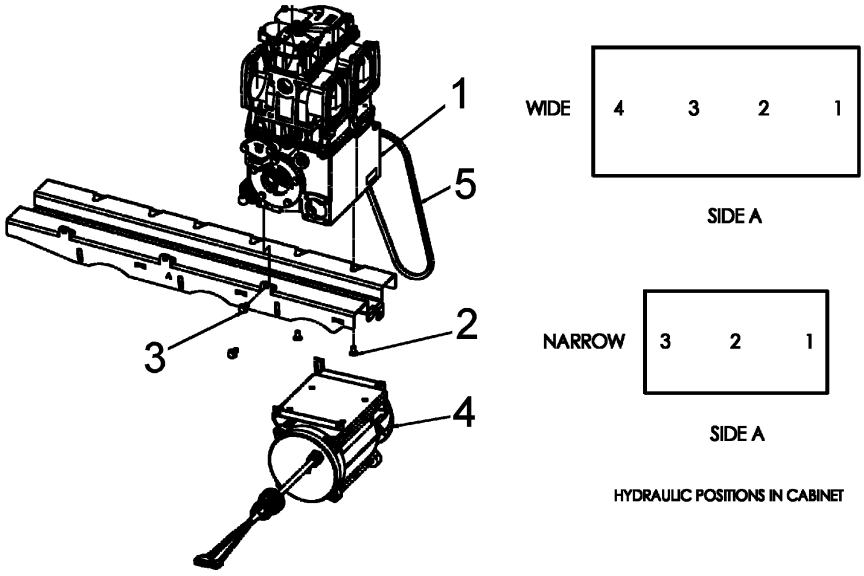

No.	Part Number	Description	Amount
1		**Combined unit**	
	WM020553-0007	- Pump and meter double sided, EMEA/LA, FS, ATC	1

No.	Part Number	Description	Amount
	WM020553-0008	- Pump and meter single A, EMEA/LA, FS, ATC	1
	WM020553-0009	- Pump and meter double sided with connector, EMEA/LA, FS	1
	WM020553-0010	- Pump and meter double sided with connector, EMEA/LA, FS, ATC	1
	WM020553-0011	- Compact pump weith connector, EMA/LA, ATC	1
	WM020553-0012	- Pump and meter double sided, EMEA/LA, FS	1
	WM020553-0013	- Pump and meter single A, EMEA/LA, FS	1
	WM028606-0001	- Remote inlet, meter and pulser, dome low, double sided	1
	WM028606-0002	- Remote inlet, meter and pulser, dome low, double sided, UL	1
	WM028606-0003	- Remote inlet, meter and pulser, dome low, double sided ethanol	1
	WM028606-0004	- Remote inlet, meter and pulser, dome low, double sided ethanol, UL	1
	WM028606-0005	- Remote inlet, meter and pulser, dome low, single A, ethanol	1
	WM028606-0006	- Remote inlet, meter and pulser, dome low, single A, ethanol, UL	1
	WM028606-0007	- Remote inlet, meter and pulser, fome low, dingle B, ethanol	1
	WM028606-0008	- Remote inlet, meter and pulser, dome low, single B, ethanol, UL	1
	WM046084-0001	- Pump, meter and pulser, dome low, double sided	1
	WM046084-0002	- Pump, meter and pulser, fome low, double sided, UL	1
	WM046084-0003	- Pump, meter and pulser, fome low, single A	1
	WM046084-0004	- Pump, meter and pulser, fome low, single A, UL	1
	WM046084-0005	- Pump, meter and pulser, dome low, single B	1
	WM046084-0006	- Pump, meter and pulser, dome low, single B, UL	1

No.	Part Number	Description	Amount
2	WM009773-0002	Screw, hex head, M8x16, with flange	2
3	WB000401-0002	Screw, CSK socket cap, M8x12	2
4		**Motor**	
	WM045892-0001	- Single phase 0.75 kW, 115V/230V, 1730 rpm, 60 Hz, UL	1
	WM045890-0004	- Single phase 0.75 kW, 220-240V, 1730rpm, 60Hz, ATEX	1
	WM045891-0001	- 3-phase 0.75 kW, 380V, 1710rpm, 60Hz, UL	1
	WM045889-0001	- 3-phase 0.75kW, 400V, 1430rpm, 50Hz, ATEX-COM	1
	WM045889-0005	- 3-phase 0,75kW, switchable, 220/380V, 1430rpm, 50/60Hz, ATEX-COM	1
	WM045890-0001	- Single phase 0.75kW, 230V, 1450rpm, 50Hz, ATEX-COM	1
	WM045893-0004	- 3-Phase 1.1kW, switchable, 220/380V, 1430rpm, 50/60Hz, ATEX-COM	1
	WM045893-0001	- 3-phase 1.1kW, 400V, 1430rpm, 50Hz, ATEX-COM	1
	WM045889-0006	- 3-phase 0.75kW, 400V, 1430rpm, 50Hz, ATEX	1
	WM045889-0007	- 3-Phase 0.75kW, 220/380V, 1430rpm 50/60Hz, ATEX	1
	WM045890-0002	- Single phase 0.75kW, 230V, 1450rpm, 50Hz, ATEX	1
	WM045890-0003	- Single phase 0.75 kW, 220-240 V, 1730 RPM, 60 Hz, ATEX-COM	1
	WM045893-0005	- 3-Phase 1.1kW, 400V, 1430rpm, 50Hz, ATEX	1
	WM045893-0006	- 3-Phase 1.1kW, 220/380V, 1430rpm, 50/60Hz, ATEX	1
	WM045894-0001	- Single phase 1.1kW, 230V, 1430rpm, 50Hz, ATEX-COM	1
	WM045894-0002	- Single phase 1.1kW, 230V, 1430rpm, 50Hz, ATEX	1
	WM045894-0003	- Single phase 1.1 kW, 220-240 V, 1730 RPM, 60 Hz, ATEX-COM	1

No.	Part Number	Description	Amount
	WM045894-0004	- Single phase 1.1kW, 220-240V, 1730rpm, 60Hz, ATEX	1
5		**Belt, Z-profile**	
	WM003054	- SPZ 787, For 40 lpm fuel delivery (0,75 kW, 50 Hz)	1
	WM009676	- SPZ 812, For 70-120 lpm fuel delivery (1,1 kW, 50 Hz)	1
	WM008374	- SPZ 825	1
	WM007324	- SPZ 772, For 40 lpm fuel delivery (0,75 kW, 60 Hz)	1
	WM003054	- SPZ 787, For 70-120 lpm fuel delivery (1,1 kW, 60 Hz)	1
		Pulley for switchable moters, Z-profile	
	WM054460-0001	- SPZ 71, od=75mm, id=19mm, 60Hz	1
	WM054460-0002	- SPZ 80, od=84mm, id=19mm, 60Hz	1
	WM054460-0003	- SPZ 85, od=89mm, id=19mm, 50Hz	1
	WM054460-0004	- SPZ 95, od=99mm, id=19mm, 50Hz	1
-	See page 135	Support, suction hydraulics	

WARNING!

Electrical components under ATEX marked with Ex **must not** be repaired and should be replaced as complete spare part in case of operational functional failure.

7.6 Hydraulic

7.6.1 Pump cover - suction

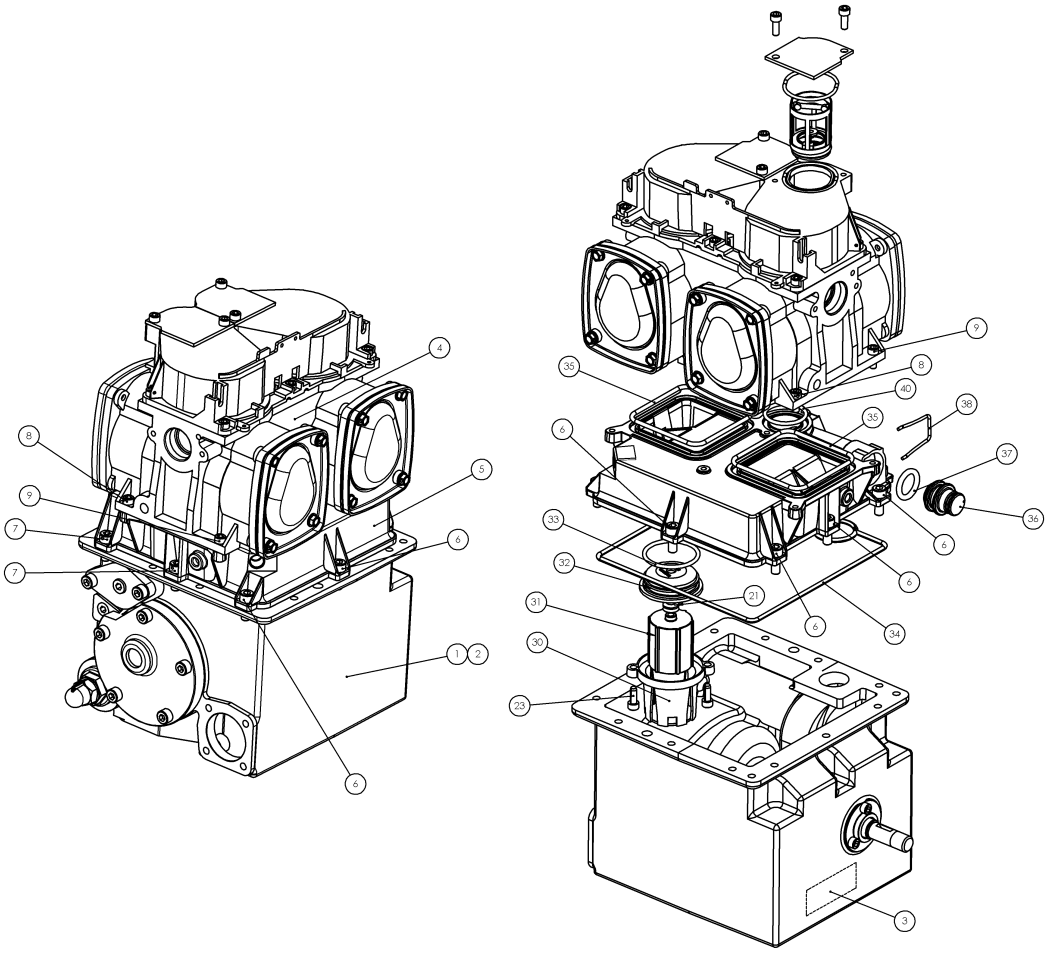

30. 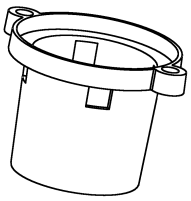	31. 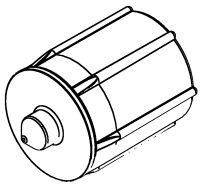		

No.	Part Number	Description	Amount
1	WR000632	Housing, machined, pump	
2	---	---	
3		**Identification label**	
	WM021062-0004	- Combined unit, compact pump	
	WM021062-0002	- Combined unit, pump & meter - single sided	
	WM021062-0001	- Combined unit, pump & meter - double sided	
	WM022147-0001	- Fuel pump, internal gear	

No.	Part Number	Description	Amount
4		Fuel meter see page 144	
5	WM009207-0001	Cover, machined (With single bump connection for the air venting tube)	
6	WB000212-0001	Screw, hexagon socket cap, M8 x 20	
7	WM002220-0001	Screw seal, hexagon socket cap, M8x20	
8	WM002236	Seal screw, hexagon socket cap, M6x16	
9	WB000211-0001	Screw, hexagon socket cap, M6x16	
21	WM002282	Seal, V-shape	
23	WB000260-0001	Taptite screw, hexagon socket cap, M6x16	
30	WM017874	Float guide	
31	WM008785	Float	
32	WM013808	Cover, moulded	
33	WM001979	O-ring t=3.5, id=47	
34	WM000611	O-ring formed t=4	
35	WU002986-0001	O-ring t=4.0, id=98	
36	WM001438	Plug	
37	WM002217	O-ring t=5.0, id=21	
38	WM001440	Pin	
40	WM000612	O-ring t=3.5, id=35	

7.6.2 Pump internal gear - suction

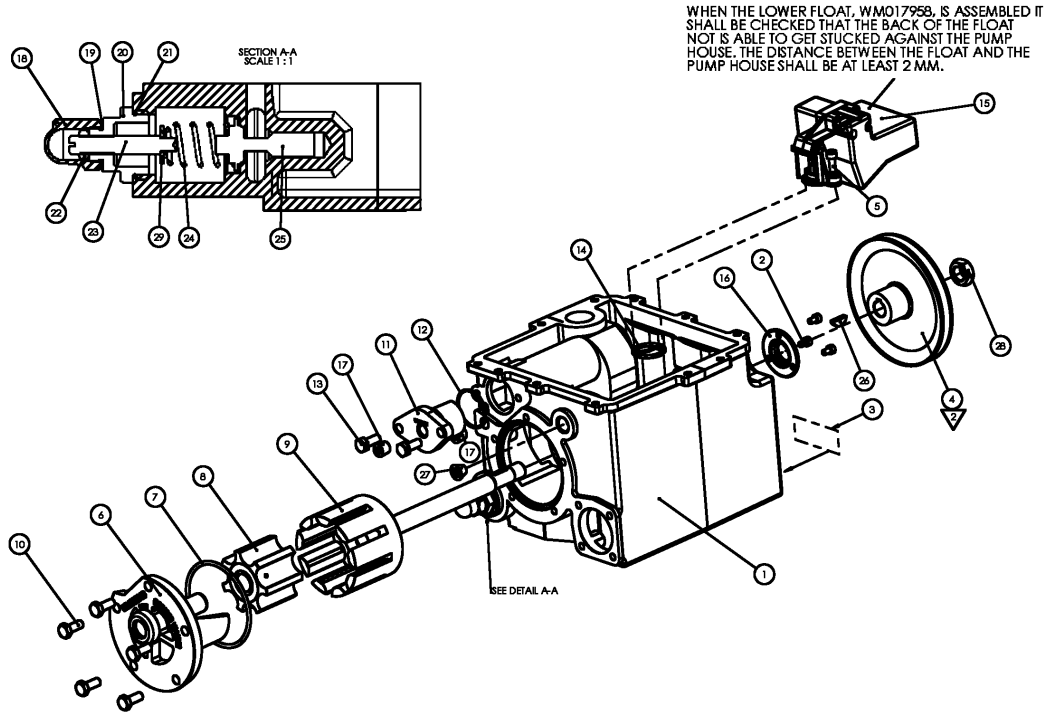

No.	Part Number	Description	Amount
1	WR000632	Housing	
2	---	---	
3	WM022147	Identification label fuel pump, internal gear, EMEA/LA	
4	WM022270	Pulley, Z-profile	
5	WB000211-0001	Screw, hexagon socket cap, M6x16	
6	WM001387	Cover, flat head and shaft	
7	WM001956	O-ring t=3.53, id=85,32	
8	WM001420	Idler	
9	WM001426	Rotor	
10	WB000212-0001	Screw, hexagon socket cap, M8x20	
11	WM000700	Cover, machined end cap	
12	WM001957	O-ring t=1.78, id=37.82	
13	WM022112	Seal screw, hex head, M8x20	
14	WM001953	O-ring t=3, id=28	
15	WM017958	Float	

No.	Part Number	Description	Amount
16	WM001934	Seal	
17	WM001083	Plug 1/4"	
18	WM001088	Seal cap	
19	WM001089	Gasket id=17, od=26, t=0.8	
20	WM001434	Cap	
21	WM001955	O-ring t=1.78, id=29.8	
22	WM001423	Nut hexagon	
23	WM001421	Screw adjusting	
24	WM001382	Spring d=18.5, l=58.7	
25	WM001383	Damper	
26	WM001667	Key, woodruff d=19, t=4.75	
27	WB000367-0002	Plug , hexagon socket pipe plug R3/8"	
28	WB000341-0001	Nut, 5/8" UNF jam-nut	
29	WM001422	Washer, plain id=5, od=10.5, t=1	

7.6.3 Plug pump unit - suction

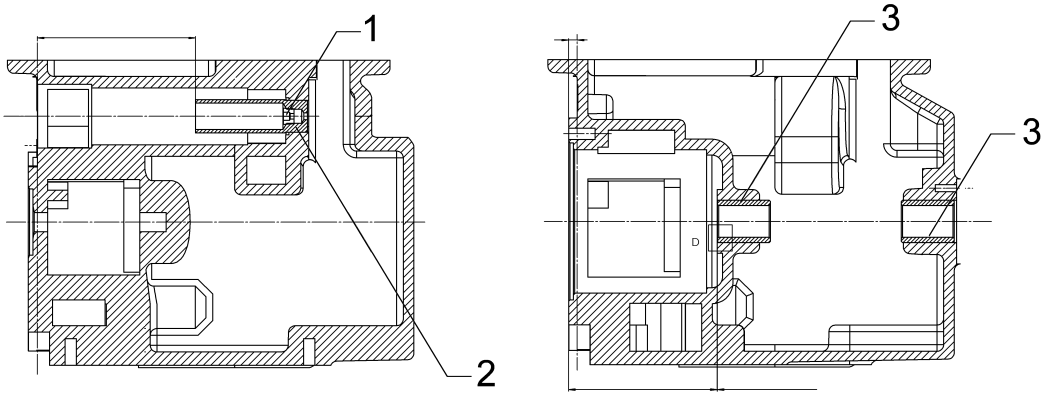

No.	Part Number	Description	Amount
1	WM001961	Plug 1/8" NPTF L=6.35, hole=3.3 mm (wrench 3/16" see below)	
	W8-452971	Plug 1/8" NPTF L=6.35, hole=2,4 mm	
	W8-452882	Wrench (Allen key) 3/16	
2	WM001078	Air separator	
3	WM001424	Bushing l=31.8mm	

7.6.4 iMeter™

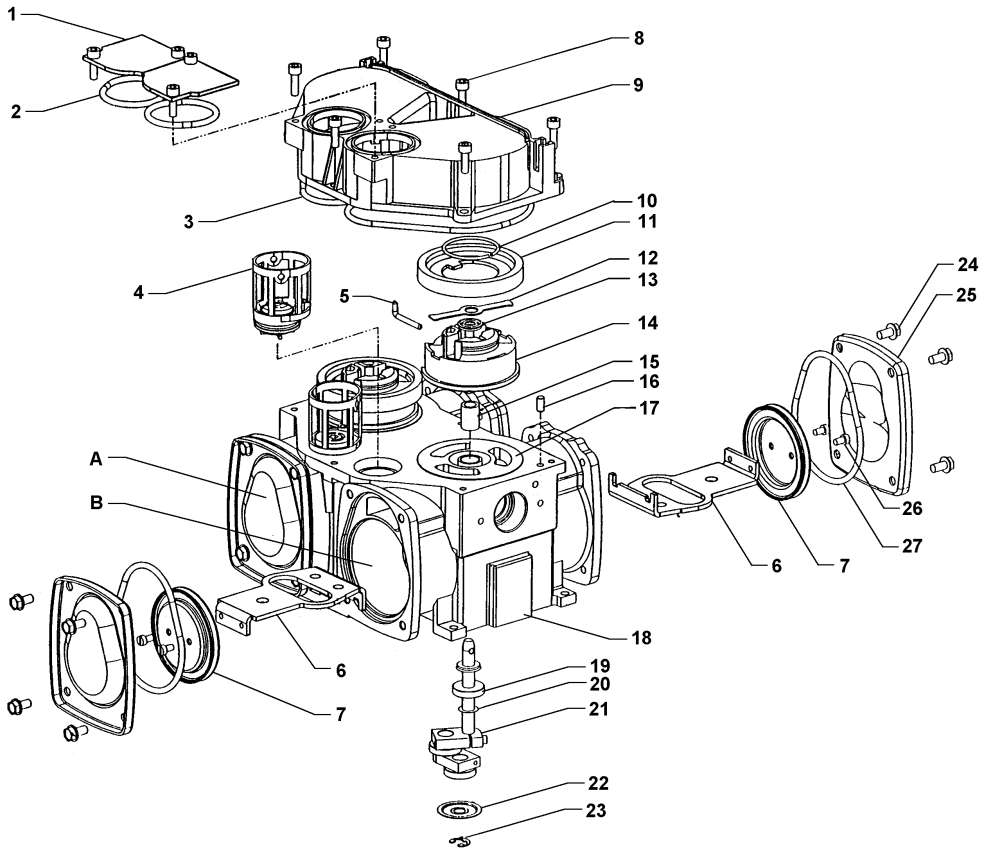

No.	Part Number	Description	Amount
1	WM000504	Cover check	
2	WM001101	O-ring	
3	WM001102	O-ring	
4	WM000695-0002	Valve ass'y	
	WM000667	O-ring	
	WM023021	Plug	
5		Pin, valve	
6		Yorke meter	
7	WM000516	Piston ass'y	
8		SHCS	
9	WM020020-0001	Meter dome	
10	WM010860	C-spring	
11		Magnetic disc	

No.	Part Number	Description	Amount
12		Leaf spring	
13		Seal, V-pack	
14		Valve	
15	WM000509	Rulon bearing	
16		Locator pin	
17		---	
18		Meter body	
19		Bearing	
20		Washer	
21		Crank ass'y	
22		Retaining washer	
23		Retaining ring	
24	WM000639	Taptite seal screw (hex head)	
	WM000638	Taptite screw, hex head, M6 L=1/2" with washer	
	WM000638-0001	Taptite screw, hex head, M6 L=3/4" with washer	
25		**Cover**	
	WM020586	Pressed (std)	
	WM001425	Casting	
26	---	---	
27	WM001103	Gasket	

7.7 Pulser to iMeter™

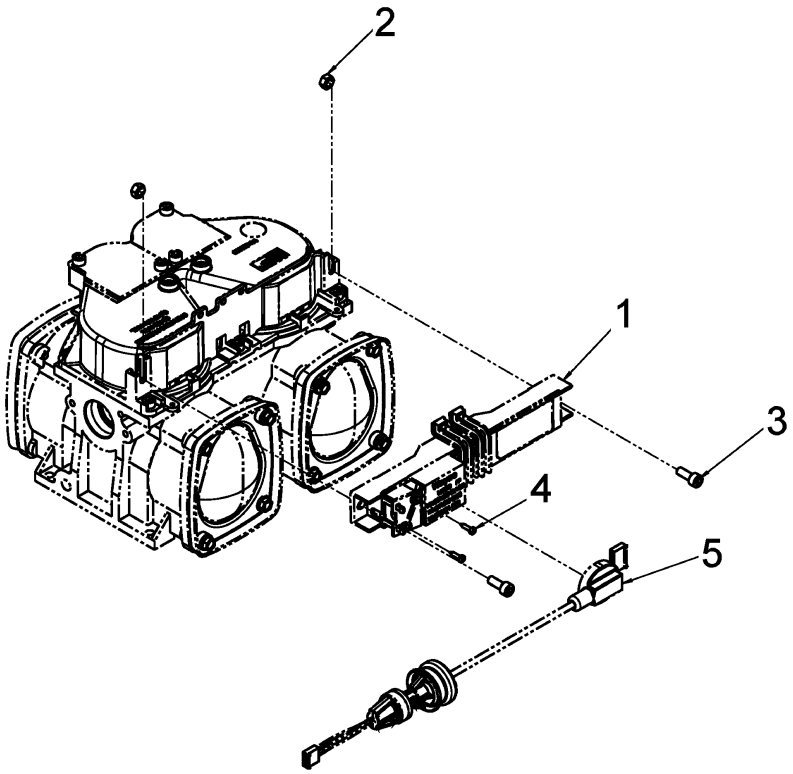

Cables, see page 237.

WARNING!

Electrical components under ATEX marked with **must not** be repaired and should be replaced as complete spare part in case of operational functional failure.

No.	Part Number	Description	Amount
1		**Pulser, wip**	
	WM001682-0002	- UL	1
	WM001682-0001	- IEC	1
2	WB000228-0003	Nut, M6	2
3	WB000211-0001	Screw, hexagon socket CAP, M6	2
4	WB000396-0001	Self tapping screw, poz, pan head, tYPE C ST2,9x13	2

No.	Part Number	Description	Amount
5	WM040834-0001	Moulded vapor barrier grommet and cable L=950	1

7.8 Filter, adaptor, nut, spout subassembly (remote)

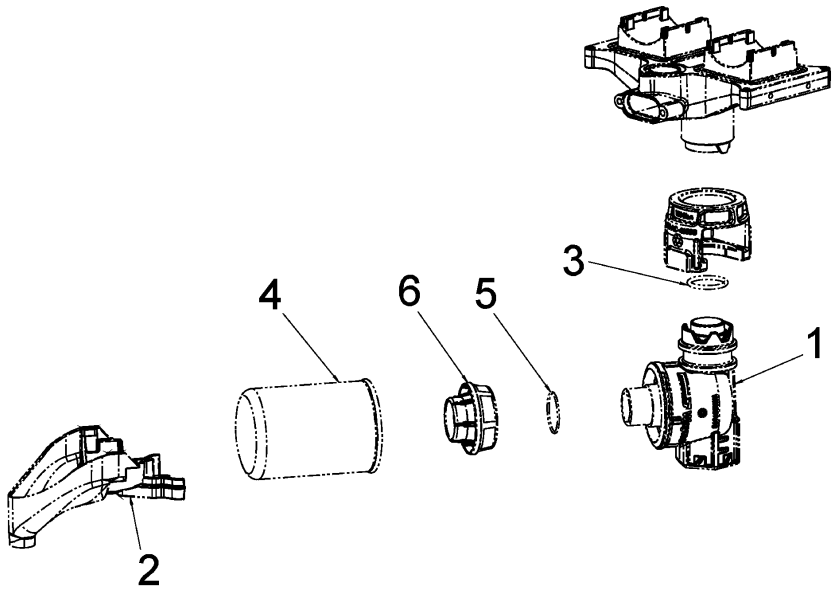

No.	Part Number	Description	Amount
1		**Remote inlet, filter screen**	
	WM039699-0004	- Std	
	WM039699-0005	- Anodized	
	WM039699-0006	- Hard anodized	
2	WM037130	Spout	
3	WM038598-0001	O-ring, t=4, id=34	
4		**Stainer**	
	WM011606-0001	- Gasoline & diesel, 10 micron	
	WM011606-0002	- Ethanol & biodiesel, 1 micron	
	WM011606-0003	- Hydrosorb diesel, 30 micron	
	WM011606-0004	- Gasoline & diesel, high speed, 30 micron	
	WM011606-0005	- Ethanol & biodiesel, High Speed 1 micron	
5	WM033193-0002	O-ring for filter (WM032398-000X)	
6	WM031449	Strainer 120 micron	

No.	Part Number	Description	Amount
7	WM037609	Gasket fluor silicon	
8	WM034667	Cap	

7.9 Filter pot (suction)

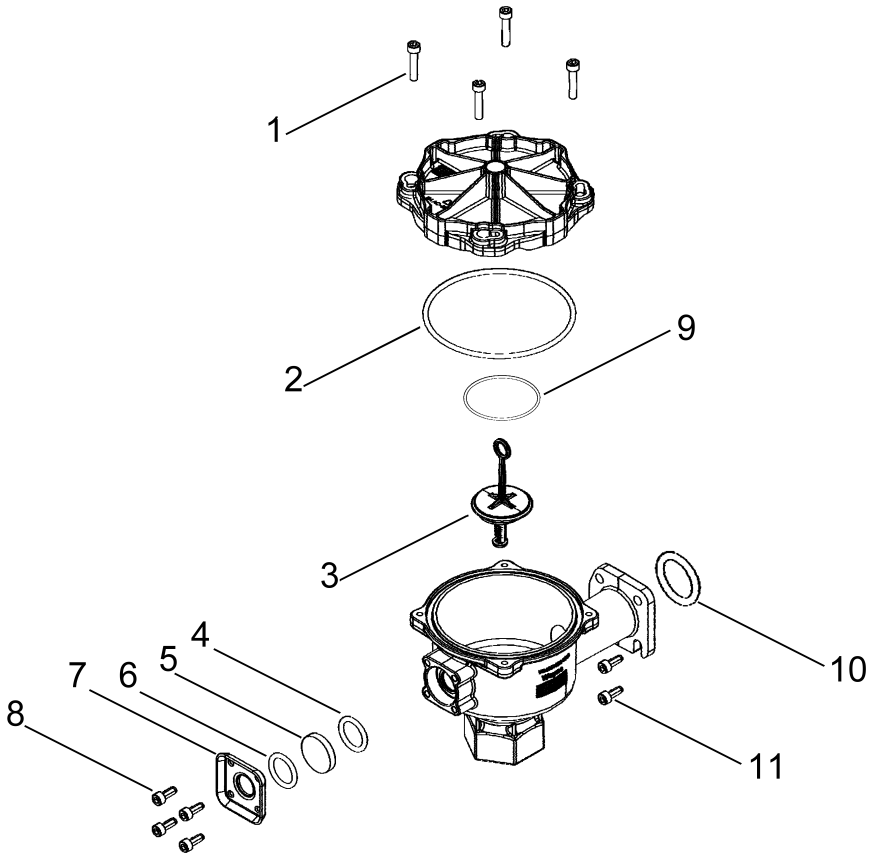

12. 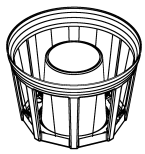	13. 		

No.	Part Number	Description	Amount
		Inlet suction with check valve	
	WM049971-0001	- NPT	1
	WM049971-0002	- NPT, sight glass	1
	WM049971-0003	- BSPT	1
	WM049971-0004	- BSPT, sight glass	1

No.	Part Number	Description	Amount
	WM049971-0005	- NPT, impregnated	1
	WM049971-0006	- NPT, sight glass, impregnated	1
	WM049971-0007	- BSPT, impregnated	1
	WM049971-0008	- BSPT, sight glass, impregnated	1
1	WB000211-0013	Screw. hexagon socket cap. M6x30	4
2	WU006953	O-ring t=4, id=120	1
3	-----	Valve, change WM049971-000X (see above)	1
4	WM003021	O-ring t=4. id=24	1
5	WU006855	Glass	1
6	WM003021	O-ring t=4. id=24	1
7	WM049681	Cover	1
8	WB000260-0001	Taptite screw, hexagon socket cap, M6x16	4
9	WM011481	O-ring t=4, id=62	1
10	WM000464	O-ring t=2, id=47	1
11	WB000212-0001	Screw, hexagon socket cap, M8x20	4
12	WM051587-0001	Strainer, 80 micron	1
13		**Filter**	
	WM051632-0001	- Cellulose, standard 25 micron	1
	WM051632-0002	- Cellulose, hydro stop, 25 micron	1
	WM051632-0003	- Polyester, biodiesel, 30 micron	1

7.10 Solenoid Valve, single

7.10.1 Solenoid Valve, single, UL

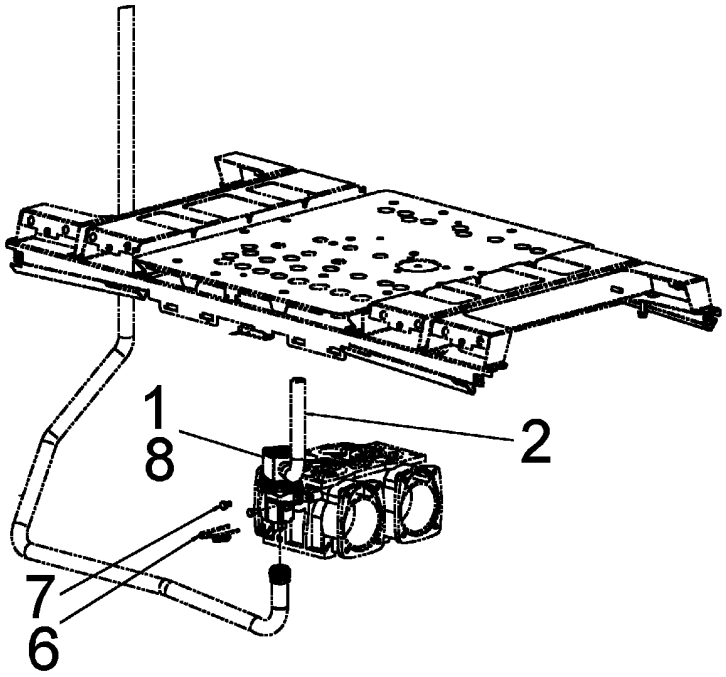

No.	Part Number	Description	Amount
---	WM048316-0006	Gasket sealing, l=63.5 mm	
---	WU007059	Sealing compound, rockite cement	
1		**Solenoid valve**	
	WM044752-0001	Proportional, single UL, ALU body	1
	WM044753-0001	Proportional, single UL, ALU body	1
	WM044754-0001	Proportional, single UL, brass body Ni plated	1
	WM044755-0001	Proportional, single UL, brass body Ni plated	1
	WM044756-0001	Proportional, single UL, brass body Ni plated	1
2		**Tube, conduit 1/2"**	
	WM040845	- Solenoid valve	
	WM040846	- Solenoid valve	
3	WM048316-0006	Gasket sealing, l=63.5 mm	1
4	WU007059	Sealing compound, rockite cement	
5	---	---	
6	WM043174	Lock pin wire dia=3.2mm	1
7	WB000629-0003	Screw, hex head, M6x12	2

No.	Part Number	Description	Amount
8	WM046966-0001	O-ring	

7.10.2 Solenoid Valve, single, IEC

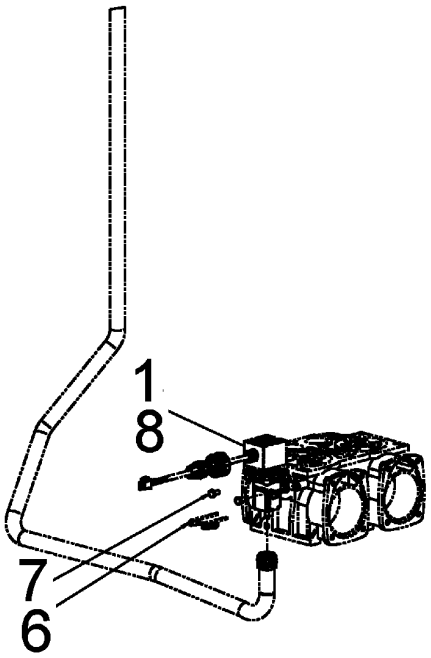

No.	Part Number	Description	Amount
1		**Solenoid valve**	
	WM045522-0001	- Proportional, single IECEX, alu body	0-8
	WM045522-0002	- Proportional, single IECEX, compcote alu body	0-8
	WM045522-0003	- Proportional, single IECEX, InMetro, alu body	0-8
	WM045525-0001	- Proportional, single IECEX, brass body	0-8
2	---	---	
3	---	---	
4	---	---	
5	---	---	
6	WM043174	Lock pin wire DIA=3,2mm	1
7	WB000629-0003	Screw, hex head, M6x12	2
8	WM46966-0001	O-ring	

7.11 Self check valve, Helix 6000

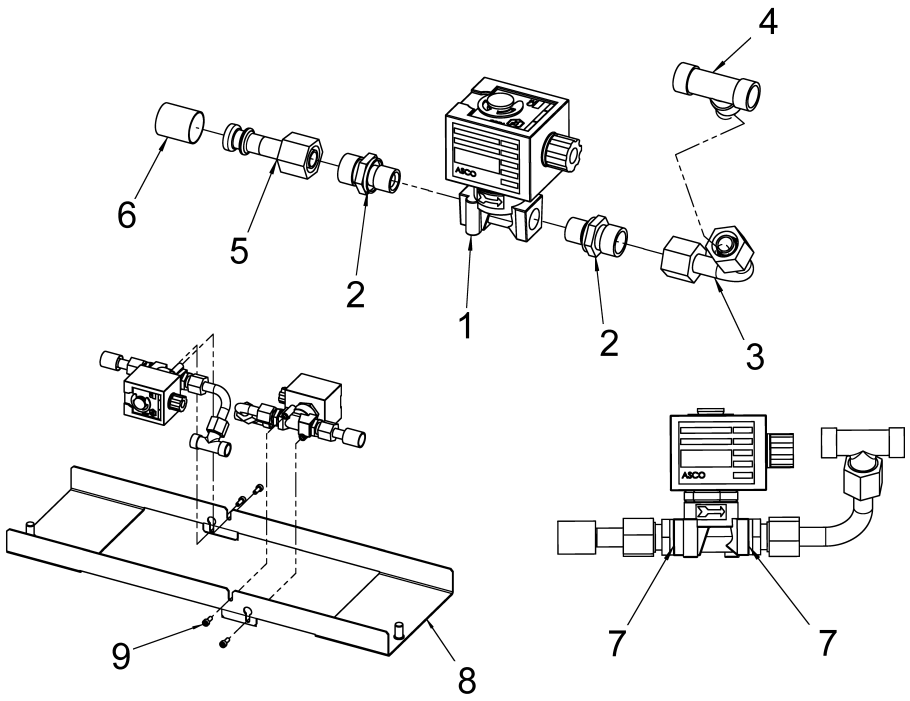

No.	Part Number	Description	Amount
1	WM021576-0001	Solenoid valve, on/off, single, female r 1/4, cable = 3m	2
2	WM020432	Coupling, straight male ge 1/4" d=10	2
3	WM047566	Tube, vapour coupling - vapour gate, check valve	2
4	WM020460	Coupling, T-coupling d=10	2
5	WM021787	Tube, vapour vapourgate, prop.valve - filter, A and B side	2
6	WM021571	Strainer 200 microns	2
7	WM003160	Sealant Loxeal 58-11, thread sealant	
8	WM054895	Bracket self check valve	1
9	WB000209-0001	Screw, hexagon socket CAP, M4x10	4

7.12 Healy VR

7.12.1 Coupling cross, Healy and Wayne VAC

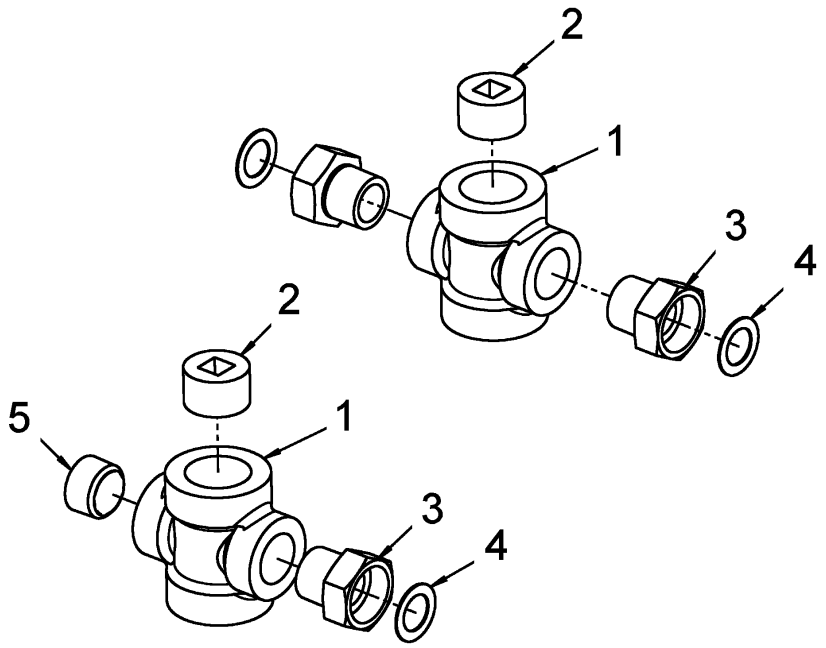

No.	Part Number	Description	Amount
1	WM042419	Coupling, cross 1"x1"x3/4"x3/4"	
2	WM002001	Plug screw cut 1"	
3	WM042421	Coupling, straight flare fitting for 7/8" ODT with 3/4"-14	1 or 2
4	WU007084	Washer, plain 1.135 od x .72 id, flare	1 or 2
5	WT002795-0004	Plug hexagon socket 3/4 " NPT male	

7.12.2 Healy VR

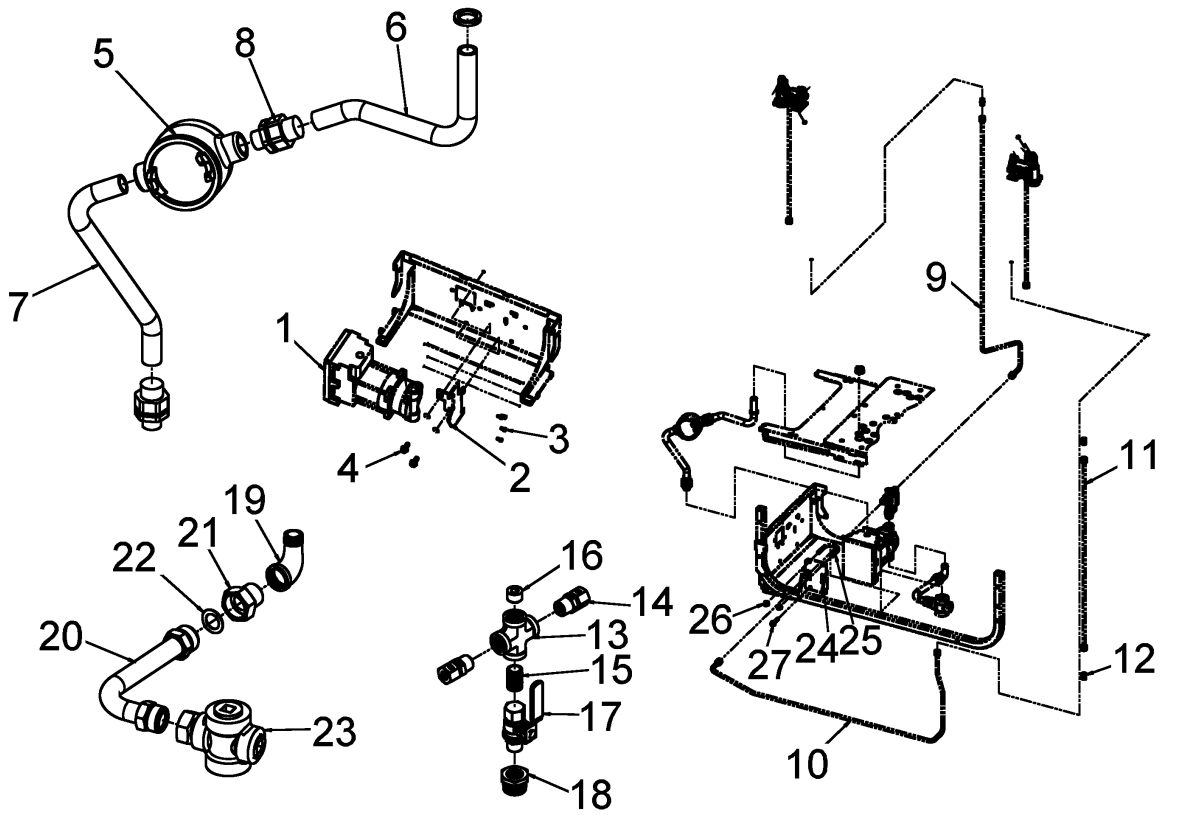

No.	Part Number	Description	Amount
1	WU003323-0001	Vapor pump Healy	1
2	WM040150	Support, L-shape bracket	1
3	WU007712	Screw hex socket	4
4	WM043586-0001	Taptite screw hexagon flange, M8x20	2
5	WU007939-0001	Junction box 1/2" conduit crouse hinds	1
6		**Tube, conduit Healy**	
	WU008242-0001	- Wide	1
	WU008241-0001	- Narrow	1
7	WM041027	Tube, conduit ½”	1
8	WM042428	Coupling 1/2" NPT conduit union	2
9	WM048620	Tube, vapor id/od 8/10	1
10		**Tube, vapor id/od 8/10 (Healy)**	
	WM048622	- Wide	1
	WM048619	- Narrow	1
11	WM048617	Tube, vapor id/od 8/10 (Healy)	1

No.	Part Number	Description	Amount
12	WU007625-0001	Coupling union 10mm to 10mm tube	1, 2 or 3
13	WU007399-0001	Coupling, cross 3/8 NPT	1
14	WU007412-0001	Coupling fitting, copmression 3/8 NPT - 10 mm tube	2
15	WU002669-0001	Inlet nipple, 3/8 x 1" LG	1
16	WU007720-0001	Plug 3/8 NPT	1x if double sided, 2x if single
17	WU007703-0001	Ball valve 3/8 NPT M X F UL listed	1
18	WU007085	Bushing reducer, 3/4 to 3/8 HEX	1
19	WU002005-0001	Coupling, 90 degree 3/4-14 NPT X 1/2-14 NPT	1
20	WM042216	Tube, vapor flanged 7/8" Healy out (1x)	1
21	WM042421	Coupling, straight flare fitting for 7/8" ODT with 3/4"-14	1
22	WU007084	Washer, plain 1.135 od x .72 id, flare	1
23		**Assembly instruction coupling cross**	
	WM042423-0001	- 2 plug	1
	WM042423-0002	- 1 plug	1
24	WM040414	Support, box shape bracket VR out	1
25	WM042420	Clamp U-shape, thread M8	1
26	WM023307-0001	Lock nut, M8 , hex flange	2
27	WM043586-0002	Taptite screw, hexagon flange, M8x40	1

7.13 Dürr VR

No.	Part Number	Description	Amount
1		**Combined unit, vapor pump and motor**	
	WM047406	- Single phase 230V, 1 pump	1
	WM047407	- Single phase 230V, 2 pumps	1
	WM047408	- 3-phase 230V, 1 pump	1
	WM047409	- 3-phase 230V, 2 pumps	1

No.	Part Number	Description	Amount
	WM047410	- 3-phase 400V, 1 pump	1
	WM047411	- 3-phase 400V, 2 pumps	1
2	WM020433	Coupling, 90 degree male WE 1/4" d=10	2, 3, 4 or 6
3	WM040140	Support, box shape bracket VR motor	1
4	WM043586-0001	Taptite screw hexagon flange, M8x20	2
5	WM021234	Damper rubber, male-male	4
6	WB000229-0003	Lock nut, M6	4
7	WM046803-0001	Solenoid valve, proportional, single overmolded cable	1 or 2
8	WM020593	Coupling, straight male GE 1/4" d=10	1, 2 or 4
9	WB000209-0001	Screw, hexagon socket cap, M4x10	2 or 4
10	WM046374-0001	Tube, flexible valve-pump l=520	1
11	WM046374-0002	Tube, flexible valve-pump l=720	1
12	WM048991	Tube, vapour od=10, pump, side A - ground	1
13	WM042287	Tube, vapour od=10, pump, side B - ground	1
14	WM040693	Tube, vapor od=10, damper - vapor gate	1 or 2
15	WM048989	Tube, vapor od=10, damper - solenoid, side A	0 or 1
16	WM040695	Tube, vapor od=10, damper - solenoid, side B	0 or 1
17	WM054060	Tube, vapour od 10, pump, side A - ground	1
18	WM038082	Damper	1 or 2
19	WM038133-0004	vapor meter overmolded cable 2,65 m	1 or2
20	WB000629-0003	Screw, hex head, M6x12	2 or 4
21	WB000716	Washer, lock, M6	2 or 4
22	WM012100	Pin	3 or 6
23		**Assembly instruction check valve**	
	WM047571-0001	- Column left -T-coupling	
	WM047571-0002	- Column right -T-coupling	
	WM047571-0003	- Column left - cross	
	WM047571-0004	- Column right - cross	

No.	Part Number	Description	Amount
	WM047571-0005	- Column left -T-coupling, straight	
	WM047571-0006	- Column right -T-coupling, straight	

7.14 Vapor recovery, IEC

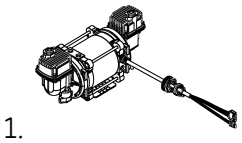
1.

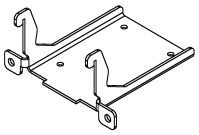
2.

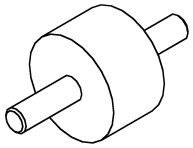
3.

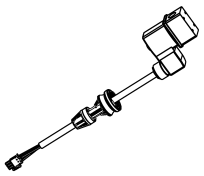
4.

No.	Part Number	Description	Amount
1		**Combined unit, vapor pump and motor**	
	WM047406	- 1-phase 230V, 1 pump	1
	WM047407	- 1-phase 230V, 2 pumps	1
	WM047408	- 3-phase 230V, 1 pump	1
	WM047409	- 3-phase 230V, 2 pumps	1
	WM047410	- 3-phase 400V, 1 pump	1
	WM047411	- 3-phase 400V, 2 pumps (on picture)	1
2	WM040140	Support, box shape bracket VR motor	1
3	WM021234	Damper rubber, male-male	4
4	WM046803-0001	Solenoid valve, proportional, single overmolded cable	1

7.15 Vapor recovery Helix 1000

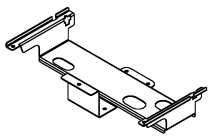
1.

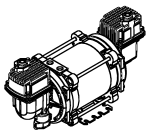
2.


3.

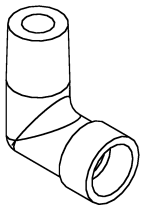
4.

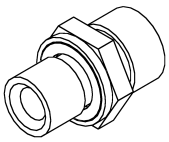
5.

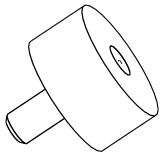
6.

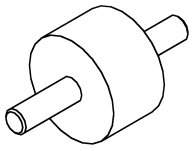
7.

No.	Part Number	Description	Amount
1	WM051896	Support, box shape vapour recovery	1
2		**Combined unit, vapour pump and motor**	1
	WM029739	- 3-phase 400V, 2 pumps (on picture)	
	WM029738	- 3-Phase 400V, 1 pumps	
	WM029737	- 3-phase 230V, 2 pumps	
	WM029736	- 3-Phase 230V, 1 pump	
	WM029735	- Single phase 230V, 2 pumps	
	WM029734	- Single phase 230V, 1 pump	
3	WM001267	Solenoid valve, proportional, single cable=3m	0-2
4	WM020433	Coupling, 90 degree male we 1/4" d=10	1-2
5	WM020593	Coupling, straight male ge 1/4" d=10	1-2
6	WM022523	Damper rubber, male-female	4
7	WM021234	Damper rubber, male-male	

7.16 VaporGate

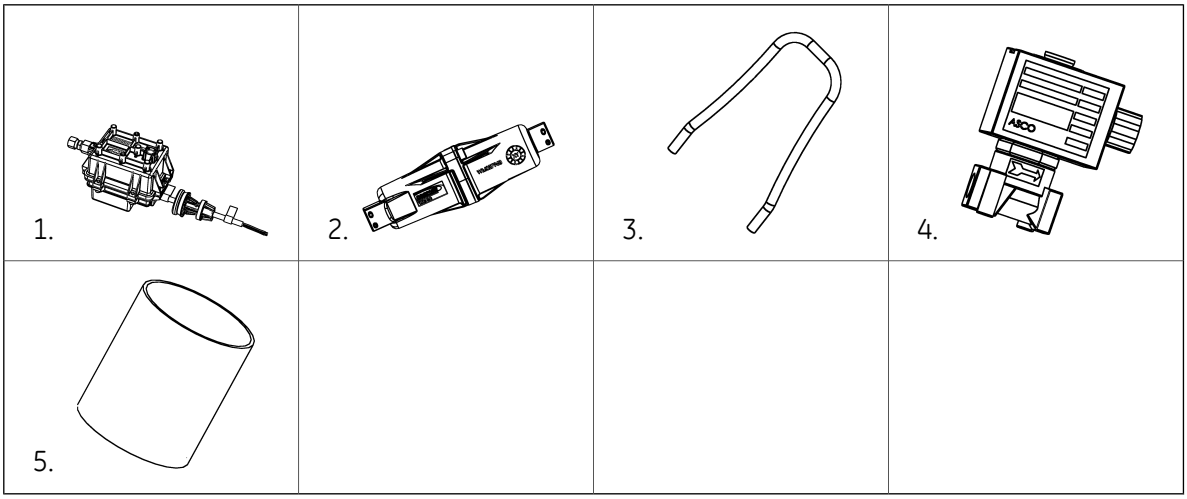

No.	Part Number	Description	Amount
1	WM038133-0004	Vapor meter	1
2	WM038082	Damper	3
3	WM012100	Pin	1
4	WM021576-0003	Solenoid valve, on/off, single , female R1/4, over moulded cable 1,25m	1
5	WM021571	Strainer 200 microns	1

7.17 VaporGate Helix 1000

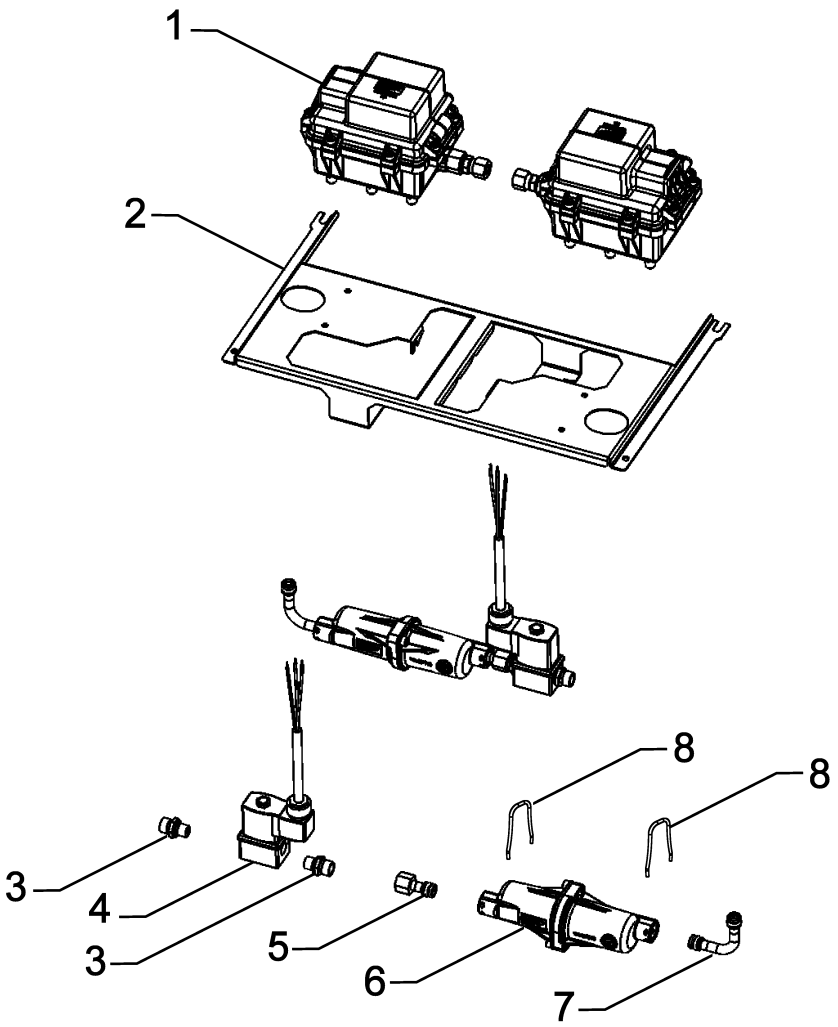

No.	Part Number	Description	Amount
1	WM038133-0001	Vapour meter without cable	1-2
2	WM051899	Support, box shape vapour gate	1
3	WM020593	Coupling, straight male ge 1/4" d=10	2-4
4	WM001267	Solenoid valve, proportional, single cable=3m	1-2
5	WM040697	Tube, vapour do 10, damper - solenoid, side A	1-2
6	WM038082	Damper	1-2
7	WM040693	Tube, vapor do 10, damper, Vapor gate	1-2
8	WM012100	Pin	2-4

7.18 Air separation (suction)

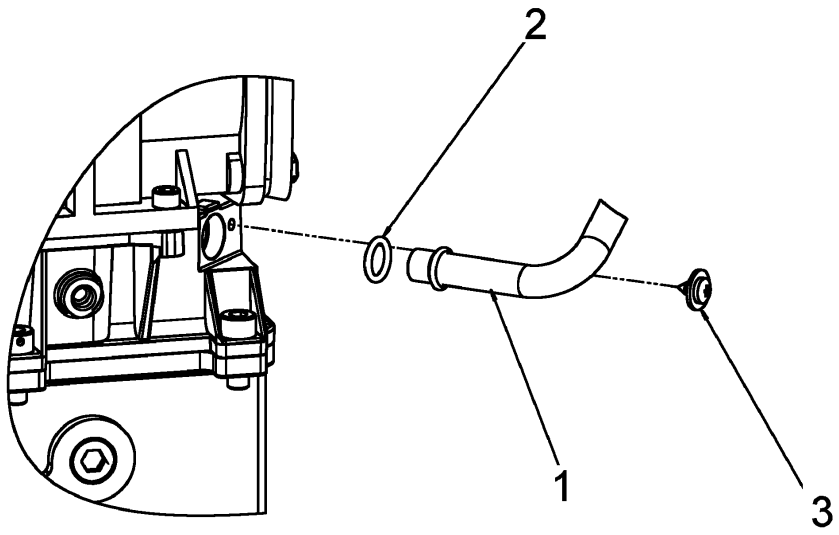

1. 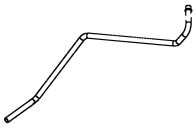	1b. 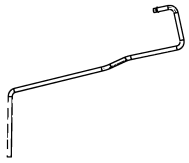	1c. 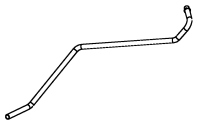	1d. 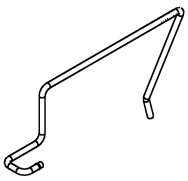
4. 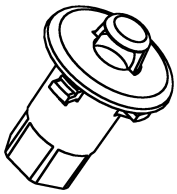			

No.	Part Number	Description	Amount
		Tube, air venting id 10/od 12	
1	WM040885	- iMeter™	1
1b	WM046391	- xFlo™	1
1c	WM053720	- iMeter™ - GS H replacement to BP, 3rd Hydraulic position.	1
1d	WM053895	- xFlo™ - GS H replacement to BP, 3rd Hydraulic position.	1
2	WM006700-0001	O-ring t=2.62, id=11.91	1
3	WM013248	Self tapping screw, Torx, pan head, type C ST4,8 x 9.5 with washer plain od=15, t=1.2	iMeter 1 xFlo 2
4	WM011355	Plug for air venting	1

7.19 Junction box

7.19.1 Junction box, Helix 2000, 4000, 5000, UL

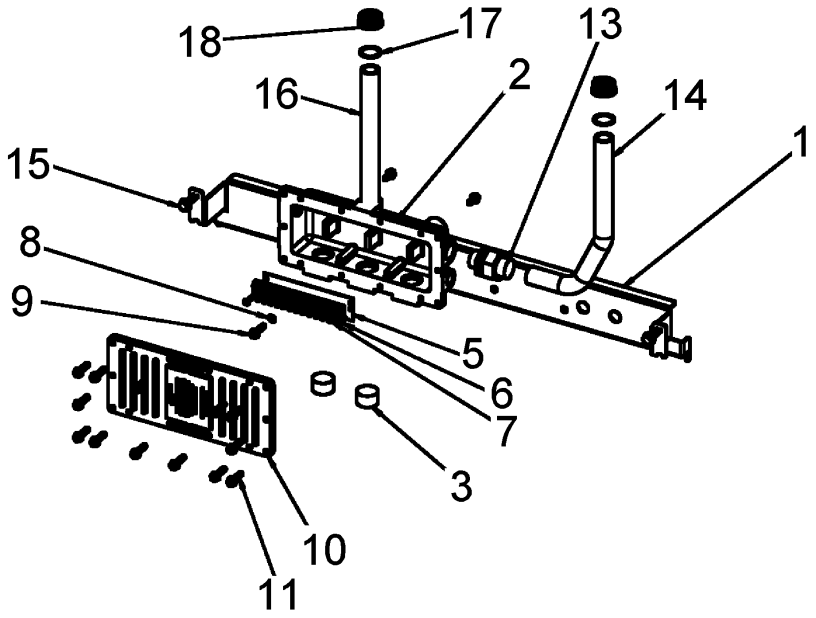

Cables, see page 231.

No.	Part Number	Description	Amount
1		**Support, box shape UL electrical support**	1
	WM041003-0001	- Narrow	
	WM041003-0002	- Wide	
2		**Housing junction box**	
	WU000305-0004	- Holes A, C	1
	WU000305-0005	- Holes A, C, D, E	1
	WU000305-0006	- Holes A, C, E	1
3	WM002001	Plug screw cut 1" - 11 NPTF X 19.05 mm long	2
4	WU007377-0001	Screw Shakeproof thread former, 1/4-20x.625	2
5	WU007088	Terminal block marking strip, 12 pos	
6	WU007089	Terminal block double row, 12 pos	
7	WU007378-0001	Screw ind hex head 8-32x .750	2
8	WU007091	Washer cup #10-H terminal	
9	WU007379-0001	Screw ind hex 10-32x.375 green	1
10	WU000303-0001	Cover	1
11	WU007380-0001	Screw Shakeproof taptite, 1/4-20x1.00	14

No.	Part Number	Description	Amount
12	---	---	
13	WU007087	Coupling 3/4 NPT conduit union	
14	WM044876	Tube, conduit 3/4" junction box	
15	WM043586-0002	Taptite screw, hexagon flange, M8x40	2
16	WU007655-0001	Cable harness, inlet, power, disp. mtrs.,CL, CAT485 (potted conduit assy)	1
17	WM045407-0002	Washer conduit	1 or 2
18	WM045471-0002	Seal conduit 3/4"	1 or 2

7.19.2 Junction box, Helix 2000, 4000, 5000, IEC

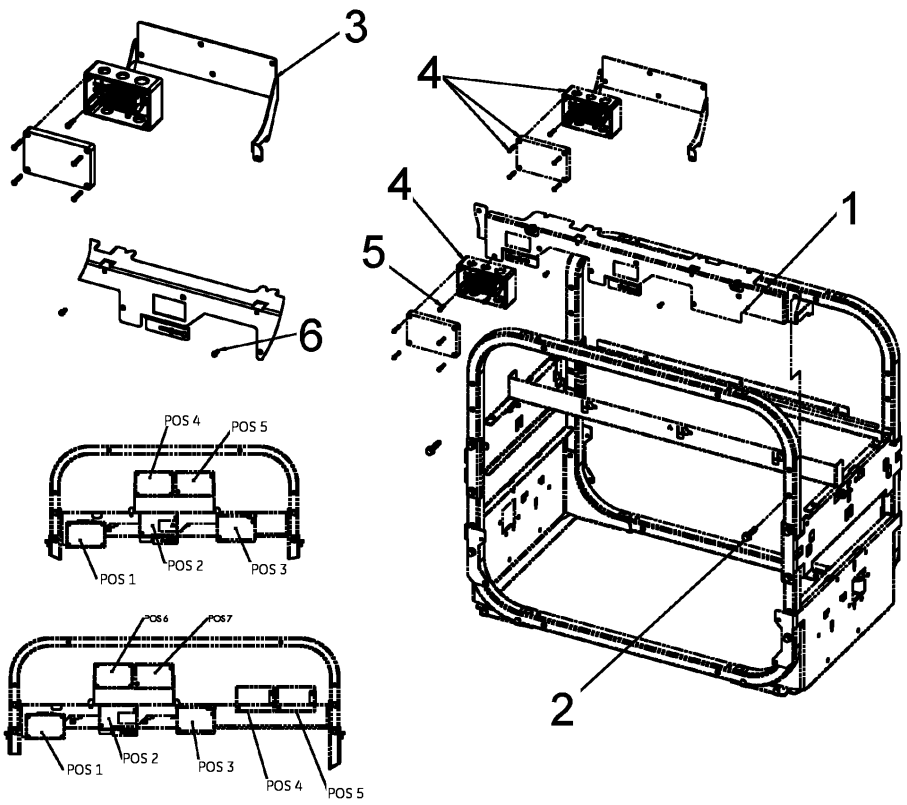

Cables, grommets and sealing, see page 231.

No.	Part Number	Description	Amount
1		**Support**	
	WM040257	- Narrow	1
	WM040259	- Wide	1
2	WM043586-0002	Taptite screw, hexagon flange, M8x40	2

No.	Part Number	Description	Amount
3	WM040261	Support options	0 or 1
4	WM026839	Junction box allround	1 - 7
5	WB000209-0002	Screw, hexagon socket cap, M4x20	2
6	WB000209-0001	Screw, hexagon socket cap, M4x10	*2

*1 2 per J-box +2 if WM040261 is used

7.19.3 Junction box, Helix 6000, IEC

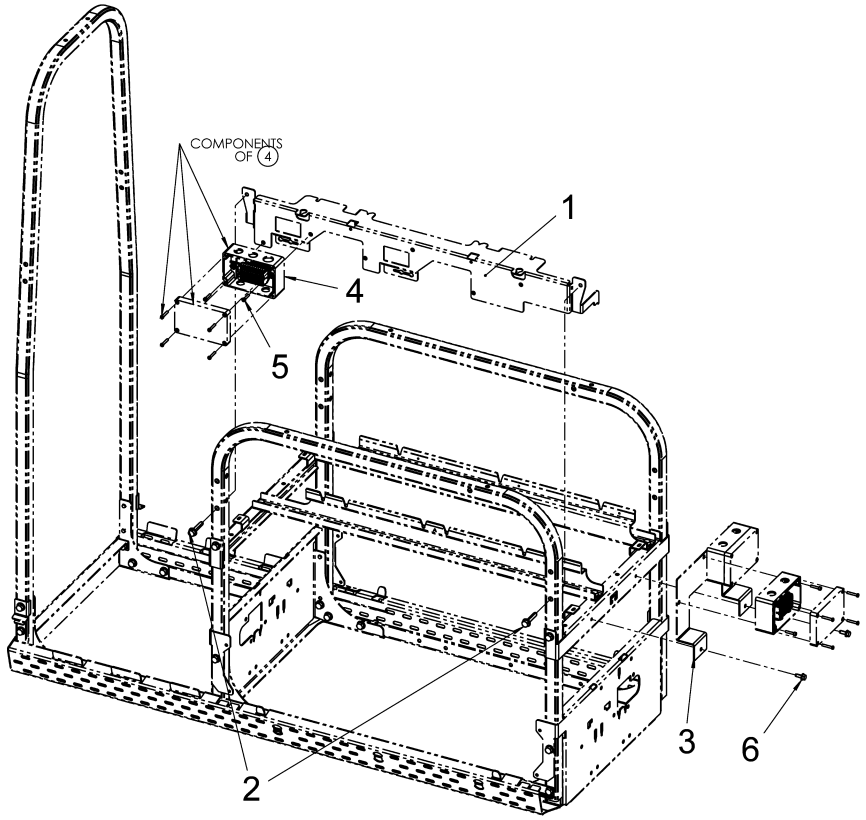

No.	Part Number	Description	Amount
1		**Support, box shape electrical support**	
	WM040257	- Narrow	1
	WM040259	- Wide	1
	WM052906	- Extra wide	1
2	WM043586-0002	Taptite screw, hexagon flange, M8x40	2
3	WM054195	Support, Z-shape junction boxes (options)	0 or 1
4	WM026839	Junction box allround	1-8

No.	Part Number	Description	Amount
5	WB000209-0002	Screw, hexagon socket CAP, M4x20	2 per j-box
6	WB000300-0001	Taptite screw, hexagon flange, M6x16	2 if WM054195 is used

7.20 Vapor barrier routing

7.20.1 Vapor barrier routing, Narrow, UL

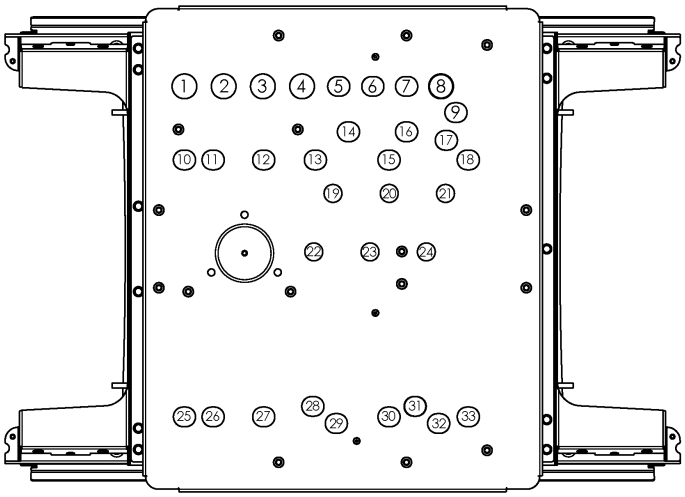

UL NARROW

Pattern Code	Component	Connection Type
1	VAC 1	3/4" CONDUIT
2	EXTRA	3/4" CONDUIT
3	EXTRA	3/4" CONDUIT
4	VAC 2	3/4" CONDUIT
5	MOTOR 1	1/2" CONDUIT
6	MOTOR 2	1/2" CONDUIT
7		1/2" CONDUIT
8	JUNCTION BOX	3/4" CONDUIT
9	MOTOR 3/HEALY VR	1/2" CONDUIT
10	DUPLEX VALVE 4	1/2" CONDUIT
11	VALVE 1	1/2" CONDUIT
12	DUPLEX VALVE 1+9	1/2" CONDUIT
13		1/2" CONDUIT
14		1/2" CONDUIT
15		1/2" CONDUIT
16	VALVE 2	1/2" CONDUIT
17	VALVE 3	1/2" CONDUIT
18	DUPLEX VALVE 2	1/2" CONDUIT
19	NOZZLE SWITCH	SMALL COM
20	WIP 2	SMALL COM
21	WIP 1	SMALL COM
22	WIP 3	SMALL COM
23	WIP 4	SMALL COM
24	ATC	SMALL COM
25	DUPLEX VALVE 8	1/2" CONDUIT
26	VALVE 5	1/2" CONDUIT
27	DUPLEX VALVE 5+10	1/2" CONDUIT
28		1/2" CONDUIT
29		1/2" CONDUIT
30		1/2" CONDUIT
31	VALVE 6	1/2" CONDUIT
32	VALVE 7	1/2" CONDUIT
33	DUPLEX VALVE 6	1/2" CONDUIT

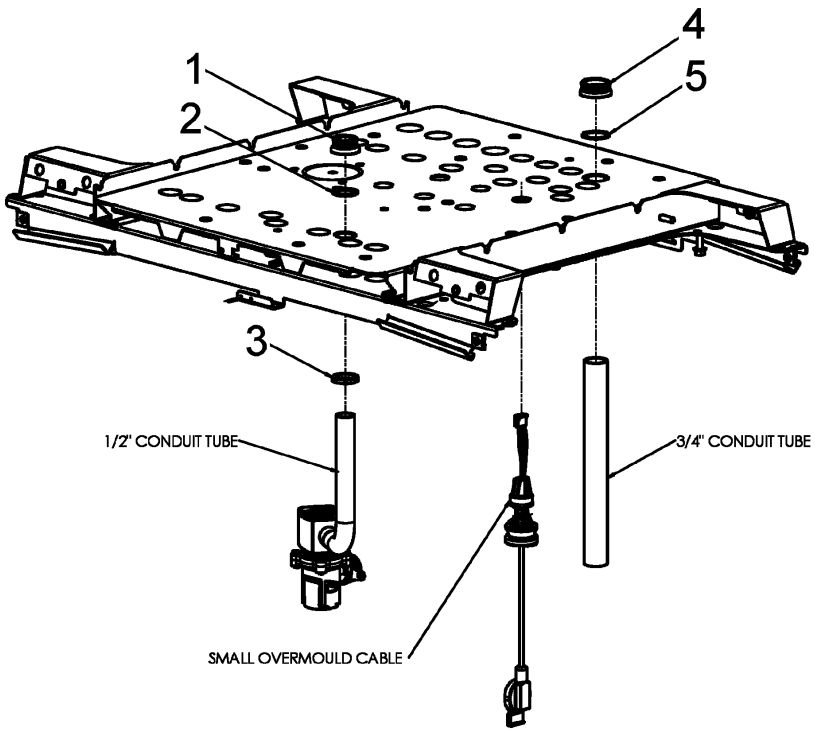

No.	Part Number	Description	Amount
1	WM045471-0001	Seal conduit 1/2"	
2	WM045407-0001	Washer conduit	
3	WM046113	Magnet, ring od=30; id=21,75; t=4	
4	WM045471-0002	Seal conduit 3/4"	
5	WM045407-0002	Washer conduit	

7.20.2 Vapor barrier routing, Wide, UL

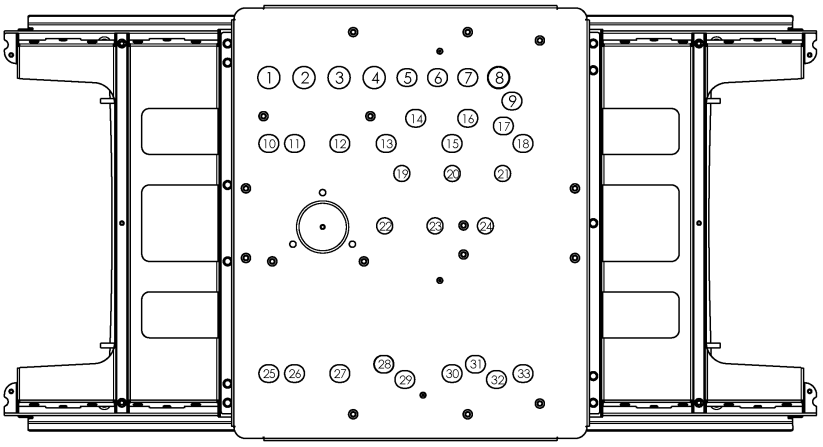

Pattern Code	Component	Connection Type
1	VAC 1	3/4" CONDUIT
2	EXTRA	3/4" CONDUIT
3	EXTRA	3/4" CONDUIT
4	VAC 2	3/4" CONDUIT
5	MOTOR 1	1/2" CONDUIT
6	MOTOR 2	1/2" CONDUIT
7	MOTOR 3	1/2" CONDUIT
8	JUNCTION BOX	3/4" CONDUIT
9	MOTOR 4/HEALY VR	1/2" CONDUIT
10	VALVE 1/DUPLEX VALVE 1+9	1/2" CONDUIT
11		1/2" CONDUIT
12		1/2" CONDUIT
13	VALVE 2	1/2" CONDUIT
14	VALVE 3	1/2" CONDUIT
15	DUPLEX VALVE 2+4	1/2" CONDUIT
16		1/2" CONDUIT
17		1/2" CONDUIT
18	VALVE 54	1/2" CONDUIT
19	NOZZLE SWITCH	SMALL COM
20	WIP 2	SMALL COM
21	WIP 1	SMALL COM
22	WIP 3	SMALL COM
23	WIP 4	SMALL COM
24	ATC	SMALL COM
25	VALVE 5/DUPLEX VALVE 5+10	1/2" CONDUIT
26		1/2" CONDUIT
27		1/2" CONDUIT
28	VALVE 6	1/2" CONDUIT
29	VALVE 7	1/2" CONDUIT
30	DUPLEX VALVE 6-8	1/2" CONDUIT
31		1/2" CONDUIT
32		1/2" CONDUIT
33	VALVE 8	1/2" CONDUIT

UL WIDE

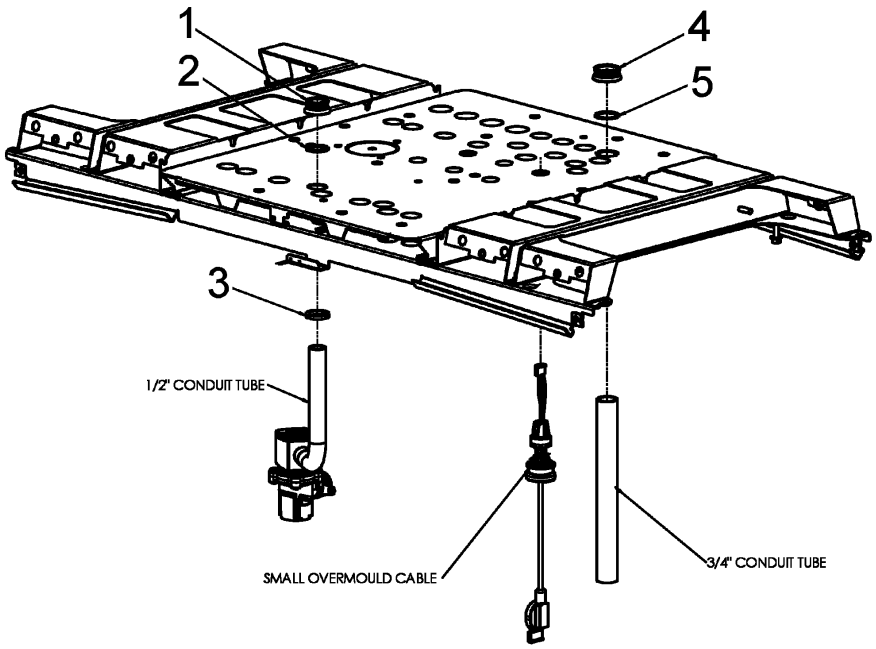

No.	Part Number	Description	Amount
1	WM045471-0001	Seal conduit 1/2"	
2	WM045407-0001	Washer conduit	
3	WM046113	Magnet, ring od=30; id=21,75; t=4	
4	WM045471-0002	Seal conduit 3/4"	
5	WM045407-0002	Washer conduit	

7.20.3 Vapor barrier routing, Wide, IEC

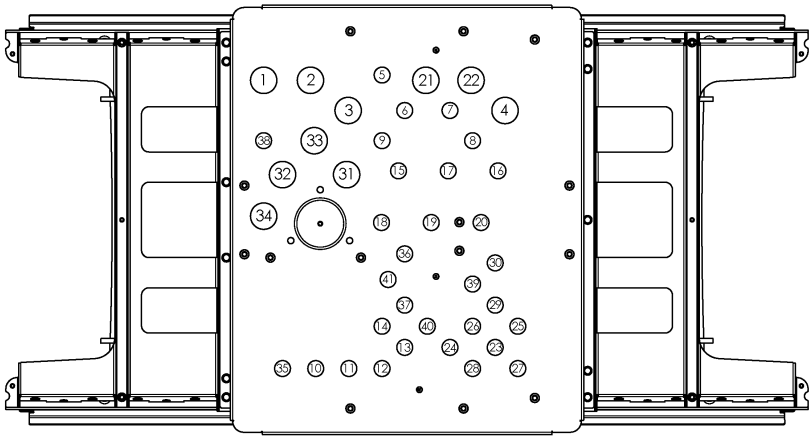

IEC

Pattern Code	Component	Connection Type
1	MOTOR 1	LARGE COM
2	MOTOR 2	LARGE COM
3	MOTOR 3	LARGE COM
4	MOTOR 4	LARGE COM
5	FLUID VALVE 1A	SMALL COM
6	FLUID VALVE 2A	SMALL COM
7	FLUID VALVE 3A	SMALL COM
8	FLUID VALVE 4A	SMALL COM
9	FLUID VALVE DUPLEX A	SMALL COM
10	FLUID VALVE 2A	SMALL COM
11	FLUID VALVE 2B	SMALL COM
12	FLUID VALVE 3B	SMALL COM
13	FLUID VALVE 4B	SMALL COM
14	FLUID VALVE DUPLEX B	SMALL COM
15	NOZZLE SWITCH	SMALL COM
16	WIP 1	SMALL COM
17	WIP 2	SMALL COM
18	WIP 3	SMALL COM
19	WIP 4	SMALL COM
20	ATC	SMALL COM
21	POWER SUPPLY 230V	LARGE COM
22	POWER SUPPLY 400V	LARGE COM
23	VR VALVE A	SMALL COM
24	VR VALVE B	SMALL COM
25	VR VALVE SELF CHECK A	SMALL COM
26	VR VALVE SELF CHECK B	SMALL COM
27	DATA 1	SMALL COM
28	DATA 2	SMALL COM
29	SAT 1	SMALL COM
30	SAT 2	SMALL COM
31	VAPOUR GATE A	LARGE COM
32	VAPOUR GATE B	LARGE COM
33	VR MOTOR	LARGE COM
34	SPARE LARGE COM	SMALL COM
35	ETHERNET	SMALL COM
36	SPARE SMALL COM	SMALL COM
37	TILT SWITCH	SMALL COM
39	TANK LEVEL	SMALL COM
40	CASH BUTTON	SMALL COM
41	VAPOUR GATE READ OUT	SMALL COM
41	REMOTE SPEAKER	SMALL COM
41	IVGPL	SMALL COM
41	IVGPL	SMALL COM

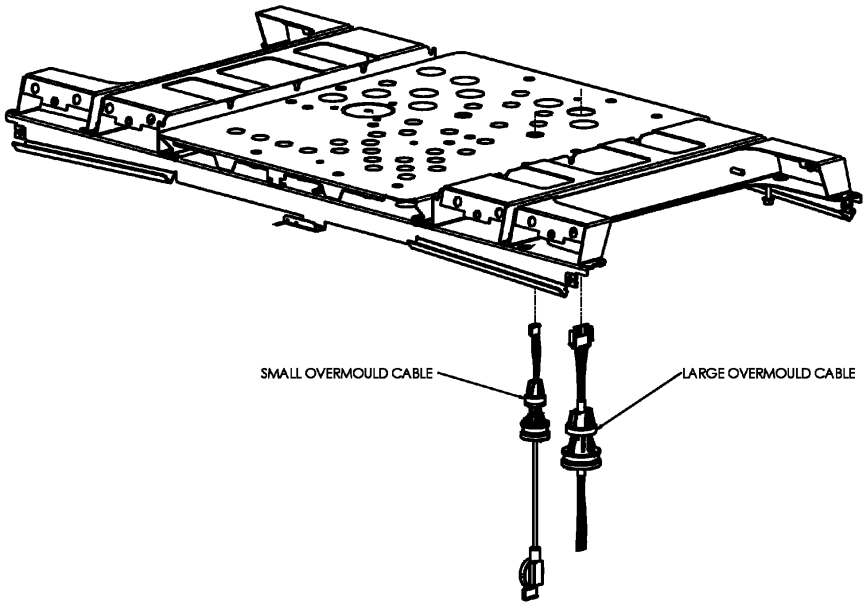

7.21 Nozzle switch module, LEE

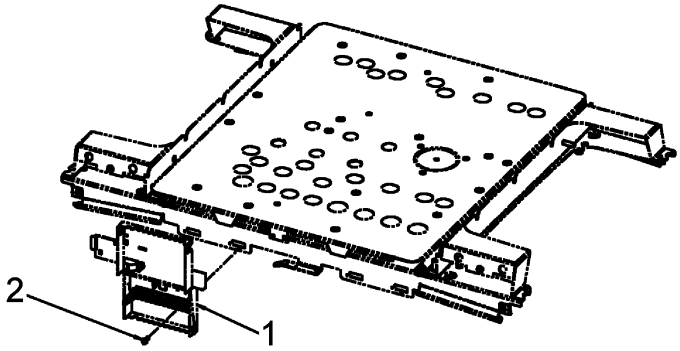

Cables, see page 234

No.	Part Number	Description	Amount
1		**Nozzle switch interface**	
	WU008514-0001	- IECEx/ATEX	1
	WU006751-0001	- UL/cUL	1
2	WM045308-0003	Taptite screw, Torx, pan head, M4x12	1

7.22 Densimeter

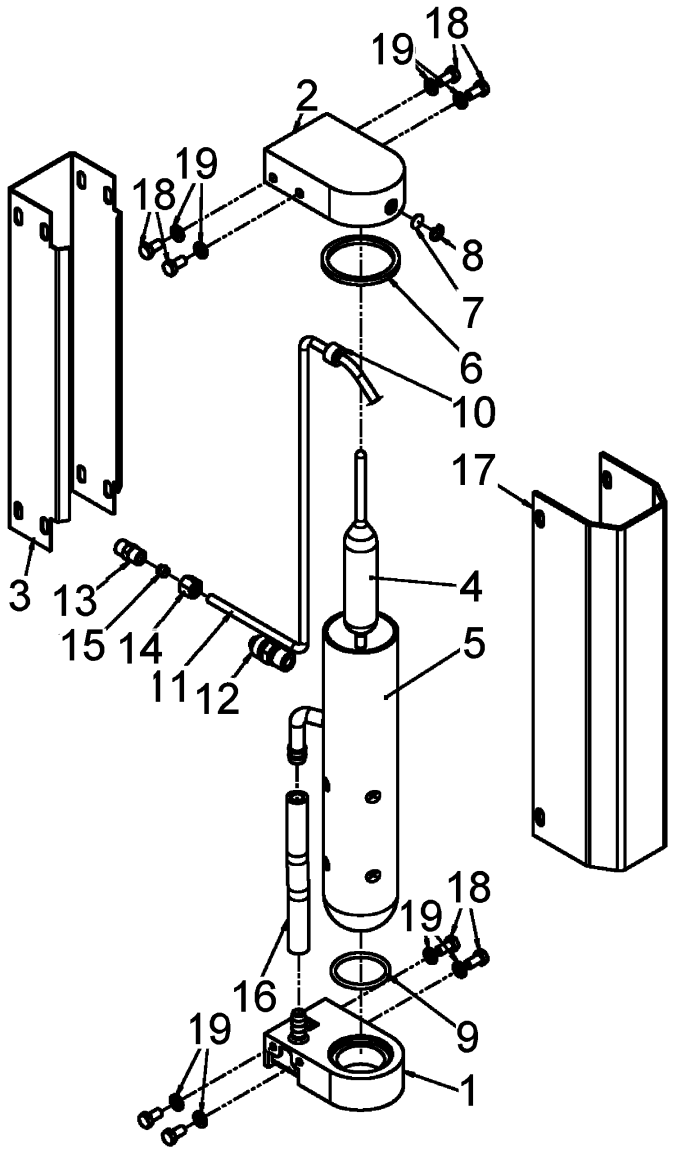

No.	Part Number	Description	Amount
1	WR001214	Moulded lower base	1
2	WR001214	Moulded lower base	1
3	WM048915-F050	Support, U-shape densimeter column, grey F050	1
4	WR001212-0001	Glass small float densimeter	1
5	WR001213-0001	Glass small glass condenser	1
6	WR001217	Gasket	1
7	WR001218	Cap screen	1
8	WR001219	Retaining ring, internal shaft=11, od=1,8, t=1,0	1

No.	Part Number	Description	Amount
9	WR001220-0001	O-ring T=3,53, ID=37,69	1
10	WR001221	Bushing sleeve	1
11	WR001222-0001	Tube inlet densimeter tube 1/4"x1/32"	1
12	WR001223	Yoke compression nipple 3/8"x1/4" BSP	1
13	WR001224	Yoke nipple 7/16"-24 UNS-2B	1
14	WR001225	Nut 1/4" 7/16"-24 UNS-2B	1
15	WR001226	Sleeve sleeve 1/4"	1
16	WR001227	Tube, flexible densimeter hose	1
17	WR001211-0001	Moulded, cover densimeter	1
18	WR001210-0001	Screw, hex head, 1/4-20x1/2"	8
19	WB000232-0003	Washer, plain, M6 id=6.4, od=12, t=1.6	8

7.23 ATC2

7.23.1 UL

1. 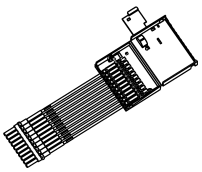	2. 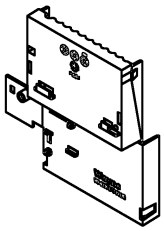	3. 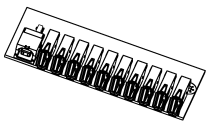	4.
5. 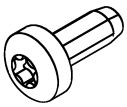	6. 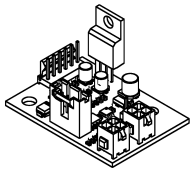		

Cables, see page 227.

No.	Part Number	Description	Amount
1		**Module automatic temperature compensation, UL/cUL**	
	WU008586-0001	- 10 probes (on picture)	1
	WU008586-0002	- 9 probes	1
	WU008586-0003	- 8 probes	1
	WU008586-0004	- 7 probes	1

No.	Part Number	Description	Amount
	WU008586-0005	- 6 probes	1
	WU008586-0006	- 5 probes	1
	WU008586-0007	- 4 probes	1
	WU008586-0008	- 3 probes	1
	WU008586-0009	- 2 probes	1
	WU008586-0010	- 1 probe	1
2	WM038173	Moulded, housing blue, atc	1
3	WM038162-0001	Board temperature module	1
4	WM044193-0001	ATC2 sensor	1
5	WM045308-0001	Taptite screw, Torx, pan head, M4x12	2
6	WU007564-0001	Board, programmed, TTL/CAN converter	1

7.23.2 IEC

1. 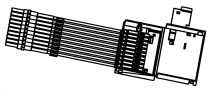	2. 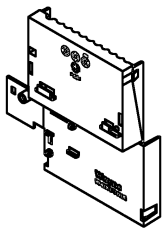	3. 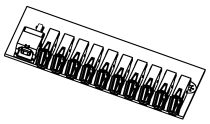	4.
5. 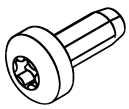	6. 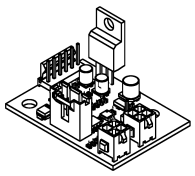		

Cables, see page 227.

No.	Part Number	Description	Amount
1		**Module automatic temperature compensation**	
	WM044193-0001	- 10 probes (on picture)	1
	WM044193-0002	- 9 probes	1
	WM044193-0003	- 8 probes	1
	WM044193-0004	- 7 probes	1
	WM044193-0005	- 6 probes	1

No.	Part Number	Description	Amount
	WM044193-0006	- 5 probes	1
	WM044193-0007	- 4 probes	1
	WM044193-0008	- 3 probes	1
	WM044193-0009	- 2 probes	1
	WM044193-0010	- 1 probe	1
2	WM038173	Moulded, housing blue, atc	1
3	WM038162-0001	Board temperature module	1
4	WM044193-0001	ATC2 sensor	1
5	WM045308-0001	Taptite screw, Torx, pan head, M4x12	2
6	WU007564-0001	Board, programmed, TTL/CAN converter	1

8 Exterior

8.1 Helix 1000

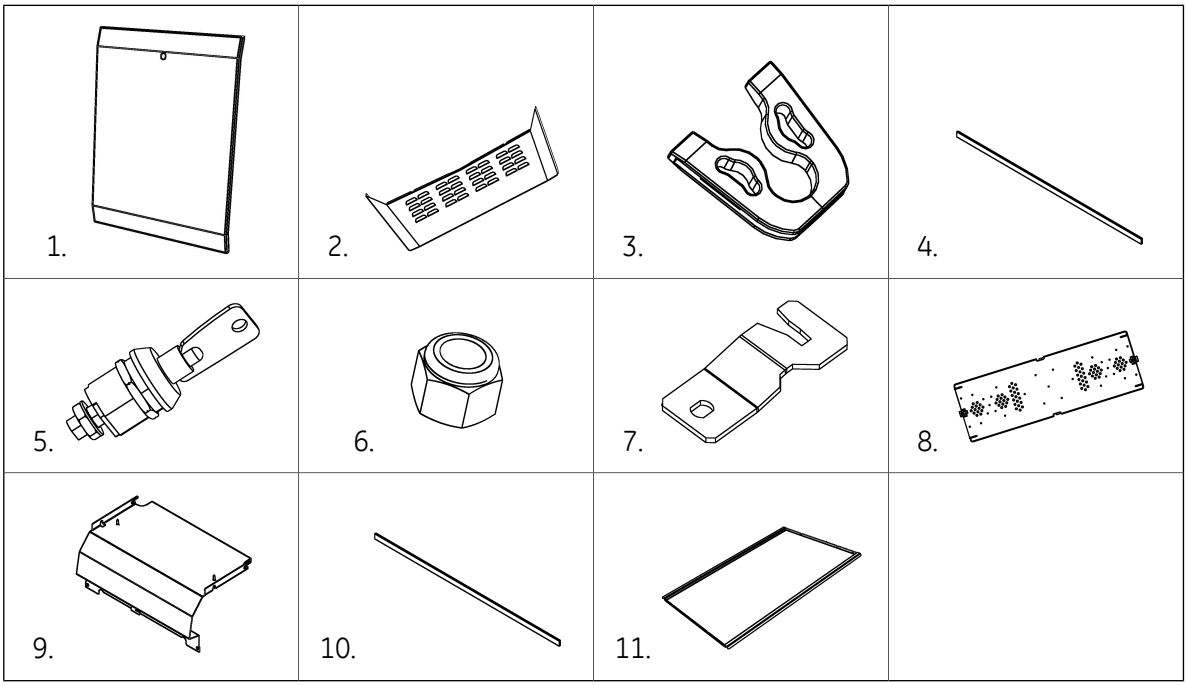

No.	Part Number	Description	Amount
	see page 181	Side panel	2
1	WM053086-W001	Front panel	2
2	WM052633-A032	Side panel ventilation	2
3	WM050303	Clamp side panel	8
4	WM053031	Gasket l=426, h=10, w=3	1
5		**Lock**	
	WU007624-0003	- DW1 key code	2
	WM026155-0001	- Individually keyed	2
6	WB000229-0003	Lock nut, M6	8
7	WM052805	Z-shape, range=41.5, w=57, l=5,2	2
8	WM049926	Cover cable channel	1
9	WM052628-A032	Cover plate, top panel hydraulic cabinet	1
10	WM053031	Gasket l=426, h=10, w=3 (hydraulic roof)	1
11	WM052637-A032	Support, box shape roof, electronic head	1

8.1.1 Side panel Helix 1000

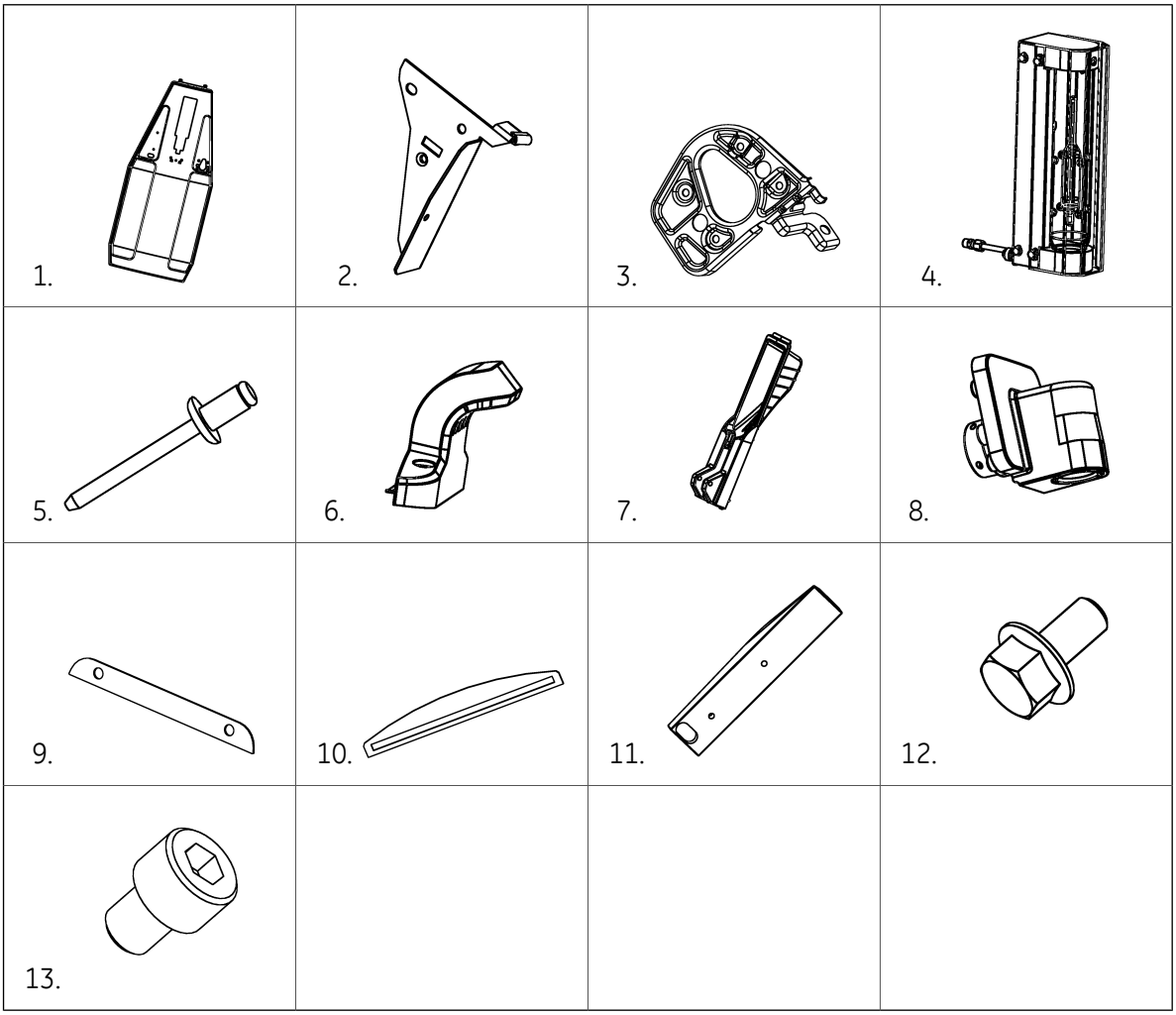

No.	Part Number	Description	Amount
1		**Side panel**	
	WM053164-F050	- With cutout for nozzle boot	1
	WM049264-F050	- With brackets, no tabs, blind	1
	WM053169-F050	- With cutout for nozzle boot with densimeter (on picture)	1
2		**Support, L-shape**	
	WM051482-0001	- Right (on picture)	1
	WM051482-0002	- Left	1
3	WM050395	Deep drawn washer, hose connector	1
4	WR001797-0001	Small densimeter	1
5	WM044310-0001	Pop rivet, dome head 6 diameter, grip range 2-4mm	10

No.	Part Number	Description	Amount
6	WM049928	Housing hose hook	1
7	see page 108	Nozzle boot Helix 1000	1
8		**Coupling hose connector**	
	WM051670-0004	- 3/4" NPT IMP	1
	WM051670-0005	- 1" NPT IMP	1
	WM051670-0006	- M34 VR IMP	1
	WM051670-0013	- 3/4" NPT ANO IMP	1
	WM051670-0014	- 1" NPT ANO IMP	1
	WM051670-0015	- M34 VR ANO IMP	1
	WM051670-0016	- 3/4" NPT HA IMP	1
	WM051670-0017	- 1" NPT HA IMP	1
	WM051670-0018	- M34 VR HA IMP	1
9	WM053081	Gasket hose hook	1
10	WM053087	Gasket hose hook, bottom	1
11	WR001579-0001	Moulded densimeter adaptor for island, black	1
12	WM019873-0001	Screw, hex head, M6x12, with flange	4
13	WB000212-0004	Screw, hexagon socket cap, M8x30	1

8.2 Helix 2000 - Small style

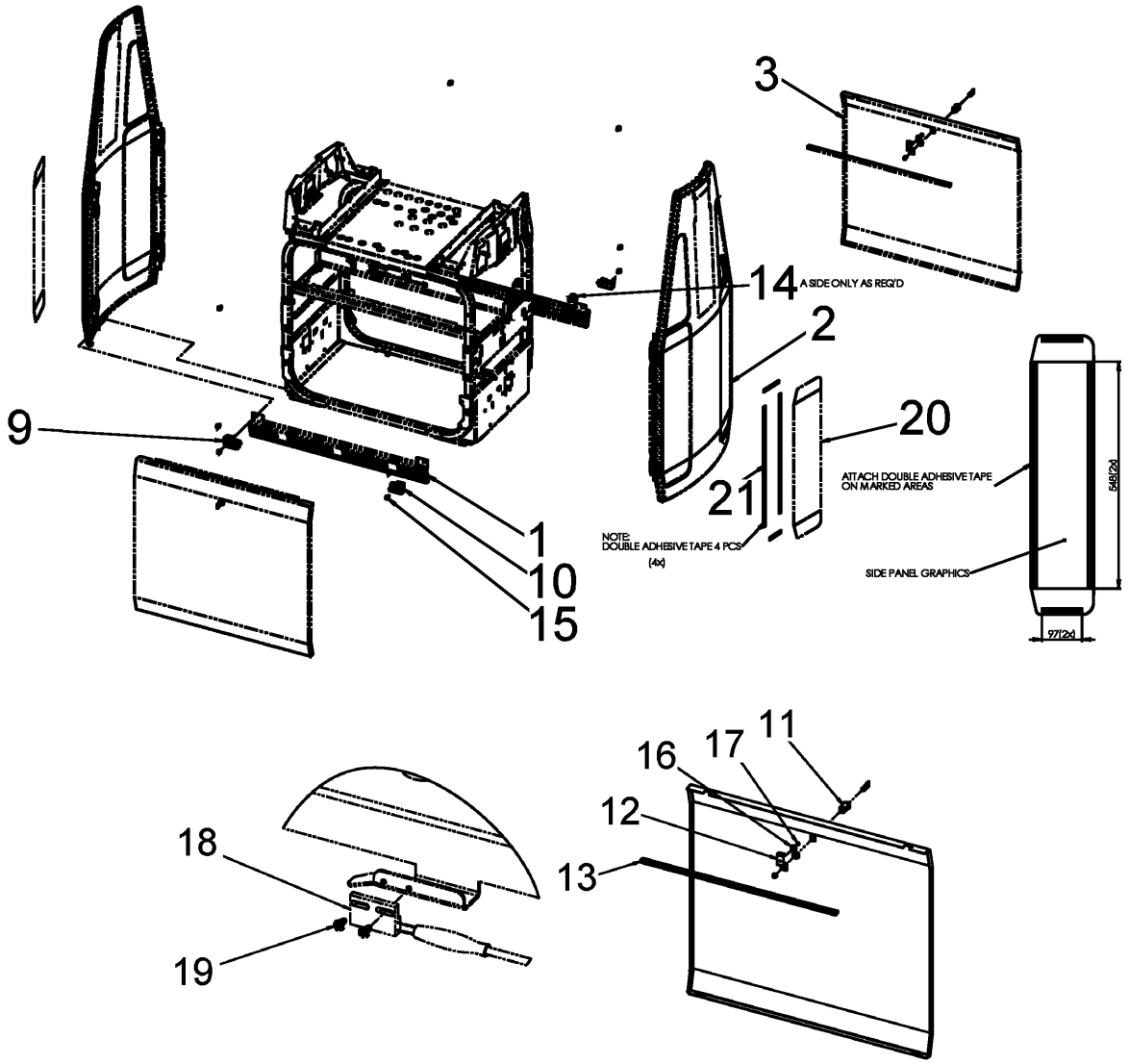

No.	Part Number	Description	Amount
1	WM045945-F050	Cover plate, base narrow, grey F050	1, 0
	WM046495-F050	Cover plate, base narrow without holes, grey F050	1, 2
2		**Side panel with brackets**	
	WM049264-F050	- No tabs, blind, grey F050	
	WM049269-F050	- No tabs, 1 hole, grey F050	
	WM049273-F050	- No tabs, 2 holes, grey F050	
	WM049274-F050	- No tabs, island, 1 hole, grey F050	
	WM049276-F050	- No tabs, island, 1 h, densim, grey F050	
	WM049277-F050	- No tabs, 2 holes, densim, gery F050	

No.	Part Number	Description	Amount
	WM049279-F050	- No tabs, 1 h, densimeter, grey F050	
3	WM046919-W007	Front panel narrow, white W007	2
4	---	---	
5	---	---	
6	---	---	
7	---	---	
8	WM047368-0001	Moulded front panel guide pin left	2
9	WM047368-0002	Moulded Front Panel Guide Pin Right	2
10		**Lock**	
	WU007624-0003	- Lock no latch, no key, DW1 key code	2
	WM026155-0002	- Lock individually keyed, 6 locks, 2 keys	1
11	WM047719	Spout 32x19mm for hydraulic door	4
12	WM048401	Latch Z-shape, range=50, w=20	2
13	WM045016-0007	Gasket profile l=760	2
14	WM011355	Plug for air venting (suction) l=39,25 (see also page 168)	0, 3
15	WB000300-0002	Taptite screw, hexagon flange, M6x12	12
16	WM003859	Magnet, ring dy=16, h=5.5	2
17	WB000280-0001	Screw, CSK socket cap, M4	2
18	WM045692-0001	Security switch, magnetic reed 2-wire normally close cable l=1300	2
19	WB000663-0001	Taptite screw, cross recessed, pan head, M3x6	4
20	WM047019-0001	Side panel graphics, White W007	4
21	WM019003	Adhesive tape, double-sided width=12mm thickness=1,1mm	5192 mm

8.3 Helix 4000 & Helix 5000 - H-style

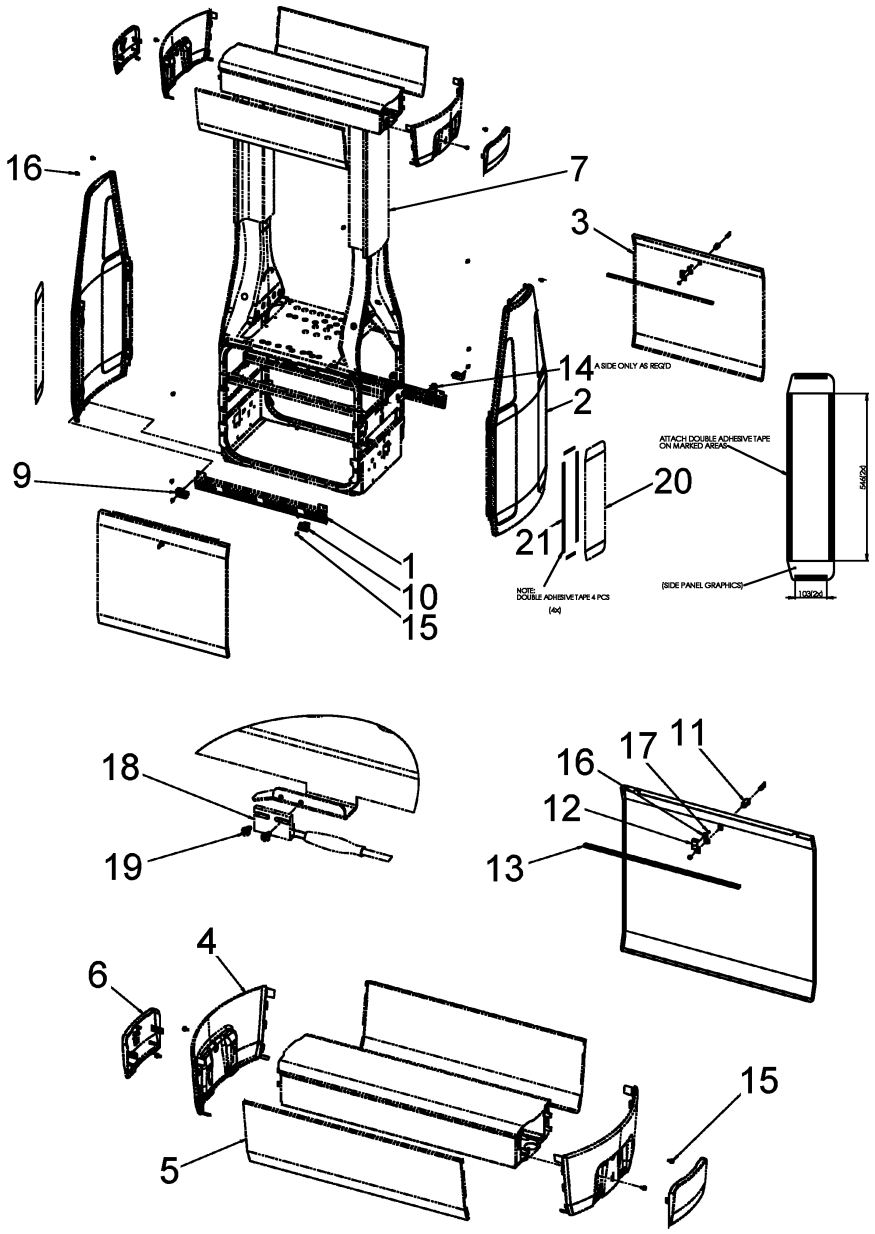

No.	Part Number	Description	Amount
1		**Cover plate**	
	WM046495-F050	- Base narrow without holes, grey F050	1, 2
	WM045945-F050	- Base narrow, grey F050	0, 1
	WM046496-F050	- Base wide without holes, grey F050	1, 2
	WM046494-F050	- Base wide, grey, F050	0, 1
2		**Side panel with brackets**	
	WM049260-F050	- Blind, grey F050	1, 2

No.	Part Number	Description	Amount
	WM049278-F050	- Densimeter, grey F050	0, 1, 2
3		**Front panel**	
	WM046919-W007	- Narrow, white W007	2
	WM046948-W007	- Wide, white W007	2
4	WM046170-W007	Top panel valance end, white, W007	2
5		**Top panel valance**	
	WM046960-W007	- Narrow, white W007	2
	WM046955-W007	- Wide, white W007	2
6	WM039951	Moulded, cover valance end	2
7	WM046883-F050	Column outer, std, L=776 mm, grey F050	2
8	WM047368-0001	Moulded front panel guide pin left	2
9	WM047368-0002	Moulded front panel guide pin right	2
10		**Lock**	
	WU007624-0003	- Lock no latch, no key, std, DW1 key code	2
	WM026155-0002	- Lock, individually keyed, 6 locks, 2 keys (for entire pump)	1
11	WM047719	Spout 32x19mm for hyd. door	4
12	WM048401	Latch Z-shape, range=50, W=20	2
13	WM045016-0005	Gasket profile l=620	2
14	WM011355	Plug for air venting (suction) l=39,25 (see also page 168)	0, 3
15	WB000300-0002	Taptite screw, hexagon flange, M6x12	20
16	WM003859	Magnet, ring dy=16, h=5.5	2
17	WB000280-0001	Screw, CSK socket CAP, M4	2
18	WM045692-0001	Security switch, magnetic reed 2-wire normally close cable l=1300	2
19	WB000663-0001	Taptite screw, cross recessed, pan head, M3x6	4
20	WM047019-0001	Side panel graphics, white W007	4
21	WM019003	Adhesive tape, double-sided width=12mm thickness=1,1mm	5192 mm

8.4 Helix 6000 - C-Style

1. 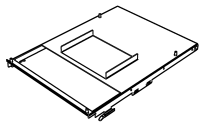	2. 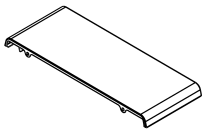	3. 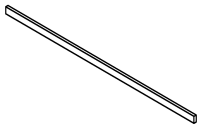	

No.	Part Number	Description	Amount
1		**Support, U-shape, hydraulic top panel, IEC**	1
	WM054884-0001	- 3 modules	
	WM054884-0002	- 4 modules	
	WM054884-0003	- 5 modules	
2		**Gasket profile, top panel Helix 6000, grey**	1
	WM052269-F050	- C33	
	WM052731-F050	- C44	
	WM052732-F050	- C55	
3		**Gasket profile (h=8, t=3)**	1
	WM007710-0001	- L=322,	
	WM007710-0002	- L=211	
	WM007710-0003	- L=251	
	WM007710-0004	- L=600	

9 Drip pan, Foundation frame, Adapter plate

9.1 Drip pan

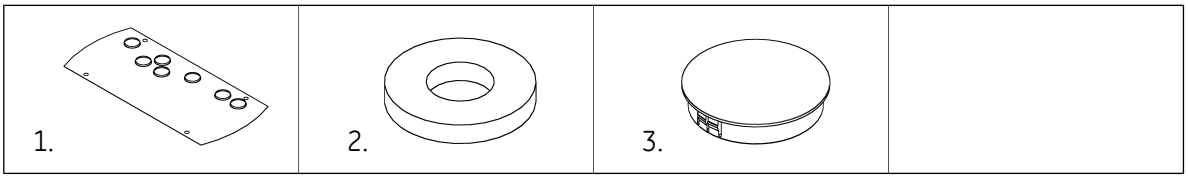

No.	Part Number	Description	Amount
1		**Drip pan, Helix H-style**	
	WM047341	- 3 hydraulics, narrow, suction, l=914mm	
	WM047343	- 3 hydraulics, narrow, remote, l=914mm	
	WM047345	- 4 hydraulics, wide, suction, l=1186mm (on picture)	
	WM047347	- 4 hydraulics, wide, remote, l=1186mm	
	WM053620	- 4 hydraulics Global Star H replacement	
		Drip pan, Helix 1000	
	WM053717	- 2 hydraulics, remote	
		Drip pan, Helix 6000	
	WM052309	- Remote wide XX-42	
	WM052307	- Remote wide XX-43	
	WM052305	- Remote wide XX-44	
	WM052303	- Remote narrow XX-31	
	WM052301	- Remote narrow XX-32	
	WM052299	- Remote narrow XX-33	
	WM052290	- Suction wide XX-42	
	WM052288	- Suction wide XX-43	
	WM052286	- Suction wide XX-44	
	WM052284	- Suction narrow XX-31	
	WM052282	- Suction narrow XX-32	
	WM052280	- Suction narrow XX-33	
2	WM045648	Gasket	
3	WM045216	Plug dome, dia=85,7 mm, t=1,6 - 6,4 mm	

9.2 Foundation frame & adapter plate

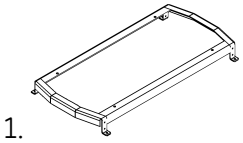

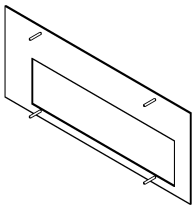

No.	Part Number	Description	Amount
1		**Foundation frame, H-style**	
	WM047337	- Narrow, l=911mm	
	WM047338	- Wide, l=1183mm (on picture)	
2	WM053607	Adapter plate wide	

10 Tubes and couplings

Air separation (suction), Air venting tube - see page 168

10.1 Liquid tubes

See also "Hydraulic configurations (tubes)" page 13.

10.1.1 H-style, high hose

No.	Part Number	Description	Amount
	WM006700-0001	O-ring, t=2.62, id=11.91	
	WM039281	Tube, fuel delivery, side B pipe 30	
	WM039293	Tube, fuel delivery, side B id/od 21.4/24 (hyd pos 3 - hose pos 3)	
	WM039299	Tube, fuel delivery, side A id/od 21.4/24 (hyd pos 3 - hose pos 3)	
	WM039301	Tube, fuel delivery, side A pipe 23	
	WM039397	Tube, fuel delivery, side B id/od 21.4/24 (hyd pos 1 - hose pos 1)	
	WM039401	Tube, fuel delivery, side B pipe 14	
	WM039403	Tube, fuel delivery, side A pipe 9	
	WM039407	Tube, fuel delivery, side A pipe 13	
	WM039410	Tube, fuel delivery, side B pipe 12	
	WM039412	Tube, fuel delivery, side A pipe 11	
	WM040763	Tube, fuel delivery, side B pipe 28	
	WM040765	Tube, fuel delivery, side B pipe 16	
	WM040767	Tube, fuel delivery, side B id/od 21.4/24 (hyd pos 3 - hose pos 1)	
	WM040771	Tube, fuel delivery, side B id/od 21.4/24 (hyd pos 1 - hose pos 1)	
	WM040773	Tube, fuel delivery, side B id/od 21.4/24 (hyd pos 2 - hose pos 1)	
	WM040775	Tube, fuel delivery, side B pipe 22	
	WM040777	Tube, fuel delivery, side B id/od 21.4/24 (hyd pos 2 - hose pos 2)	
	WM040779	Tube, fuel delivery, side B pipe 32	

No.	Part Number	Description	Amount
	WM040781	Tube, fuel delivery, side A pipe 27	
	WM040783	Tube, fuel delivery, side A id/od 21.4/24 (hyd pos 2 - hose pos 2)	
	WM040785	Tube, fuel delivery, side A pipe 29	
	WM040787	Tube, fuel delivery, side A id/od 21.4/24 (hyd pos 2 - hose pos 2)	
	WM040791	Tube, fuel delivery, side A pipe 25	
	WM040795	Tube, fuel delivery, side A pipe 21	
	WM040799	Tube, fuel delivery, side B pipe 36	
	WM040801	Tube, fuel delivery, side B id/od 21.4/24 (hyd pos 2 - hose pos 1)	
	WM040803	Tube, fuel delivery, side B pipe 10	
	WM040805	Tube, fuel delivery, side B id/od 21.4/24 (hyd pos 3 - hose pos 2)	
	WM040807	Tube, fuel delivery, side A pipe 7	
	WM040810	Tube, fuel delivery, side A id/od 21.4/24 (hyd pos 1 - hose pos 1)	
	WM040812	Tube, fuel delivery, side A id/od 21.4/24 (hyd pos 2 - hose pos 1)	
	WM040833	Tube, fuel delivery, side A id/od 21.4/24 (hyd pos 3 - hose pos 1)	
	WM041328	Tube, fuel delivery, side A pipe 35 remote	
	WM041330	Tube, fuel delivery, side A pipe 33 remote	
	WM041332	Tube, fuel delivery, side A pipe 35 suction	
	WM041334	Tube, fuel delivery, side A pipe 33 suction	
	WM041336	Tube, fuel delivery, side B pipe 24	
	WM041338	Tube, fuel delivery, side B pipe 40	
	WM041340	Tube, fuel delivery, side B pipe 44	
	WM041342	Tube, fuel delivery, side B pipe 42	
	WM042209	Tube, fuel delivery, side B 3 connections	
	WM044592	Tube, fuel delivery, side B id/od 21.4/24 (hyd pos 2 - hose pos 2)	

No.	Part Number	Description	Amount
	WM044598	Tube, fuel delivery, side A id/od 21.4/24 (hyd pos 3 - hose pos 2)	
	WM044600	Tube, fuel delivery, side A id/od 21.4/24 (hyd pos 1 - hose pos 1)	
	WM044602	Tube, fuel delivery, side A id/od 21.4/24 (hyd pos 2 - hose pos 1)	
	WM044617	Tube, fuel delivery, side A	
	WM044620	Tube, fuel delivery, side A	
	WM044622	Tube, fuel delivery, side B	
	WM044624	Tube, fuel delivery, side B	
	WM044627	Tube, fuel delivery, side A	
	WR001308	Tube, fuel delivery, side A id/od 21.4/24 (hyd pos 1 - hose pos 1)	
	WR001310	Tube, fuel delivery, side A id/od 21.4/24 (hyd pos 2 - hose pos 2)	
	WR001312	Tube, fuel delivery, side B id/od 21.4/24 (hyd pos 1 - hose pos 1)	
	WR001314	Tube, fuel delivery, side B id/od 21.4/24 (hyd pos 2 - hose pos 2)	
	WR001230	Tube, fuel delivery, side A id/od 21.4/24 (hyd pos 1 - hose pos 1)	
	WR001232	Tube, fuel delivery, side B id/od 21.4/24 (hyd pos 1 - hose pos 1)	
	WR001234	Tube, fuel delivery, side A id/od 21.4/24 (hyd pos 1 - hose pos 1)	
	WR001236	Tube, fuel delivery, side A id/od 21.4/24 (hyd pos 2 - hose pos 1)	
	WR001238	Tube, fuel delivery, side A id/od 21.4/24 (hyd pos 2 - hose pos 2)	
	WR001240	Tube, fuel delivery, side B id/od 21.4/24 (hyd pos 1 - hose pos 1)	
	WR001242	Tube, fuel delivery, side B id/od 21.4/24 (hyd pos 1 - hose pos 1)	
	WR001244	Tube, fuel delivery, side B id/od 21.4/24 (hyd pos 2 - hose pos 1)	

No.	Part Number	Description	Amount
	WR001246	Tube, fuel delivery, side B id/od 21.4/24 (hyd pos 1 - hose pos 2)	
	WR001248	Tube, fuel delivery, side B id/od 21.4/24 (hyd pos 1 - hyd pos 2)	
	WR001250	Tube, fuel delivery, side B id/od 21.4/24 (hyd pos 2 - hose pos 1)	
	WU008551	Tube, fuel delivery, side A id/od 21.4/24 (hyd pos 2 - hose pos 4)	
	WU008553	Tube, fuel delivery, side B id/od 21.4/24 (hyd pos 2 - hose pos 4)	
	WU008556	Tube, fuel delivery, side A id/od 21.4/24 (hyd pos 4 - hose pos 4)	
	WU008589	Tube, fuel delivery, side B id/od 21.4/24 (hyd pos 4 - hose pos 4)	
	WU008591	Tube, fuel delivery, side A id/od 21,4/24 (hyd pos 2 - hose pos 1)	
	WU008594	Tube, fuel delivery, side A id/od 21,4/24 (hyd pos 1 - hose pos 4)	
	WU008597	Tube, fuel delivery, side A id/od 21,4/24 (hyd pos 2 - hose pos 4)	
	WU008600	Tube, fuel delivery, side A id/od 21,4/24 (hyd pos 1 - hose pos 3)	
	WU008602	Tube, fuel delivery, side B id/od 21,4/24 (hyd pos 1 - hose pos 3)	
	WU008604	Tube, fuel delivery, side B id/od 21,4/24 (hyd pos 1 - hose pos 4)	
	WU008606	Tube, fuel delivery, side B id/od 21,4/24 (hyd pos 2 - hose pos 1)	
	WU008608	Tube, fuel delivery, side B id/od 21,4/24 (hyd post 2 - hose pos 4)	
	WU008615	Tube, fuel delivery, side B id/od 21,4/24 (hyd pos 4 - hose pos 2)	
	WU008617	Tube, fuel delivery, side A id/od 21,4/24 (hyd pos 3 - hose pos 3)	
	WU008619	Tube, fuel delivery, side A id/od 21,4/24 (hyd pos 1 - hose pos 4)	

No.	Part Number	Description	Amount
	WU008622	Tube, fuel delivery, side B id/od 21,4/24 (hyd pos 3 - hose pos 3)	
	WU008625	Tube, fuel delivery, side A id/od 21,4/24 (hyd pos 1 - hose pos 2)	
	WU008627	Tube, fuel delivery, side B id/od 21,4/24 (hyd pos 1 - hose pos 2)	
	WU008632	Tube, fuel delivery, side A id/od 21,4/24 (hyd pos 4 - hose pos 3)	
	WU008634	Tube, fuel delivery, side B id/od 21,4/24 (hyd pos 4 - hose pos 3)	
	WM045663	Tube, fuel delivery id/od 21.4/24 (for checkvalve adapter)	

See also Hydraulic configurations (tubes) page 13.

10.1.2 C-style (Helix 6000)

No.	Part Number	Description	Amount
	WM006700-0001	O-ring, t=2.62, id=11.91	
	WM029159	Tube, fuel delivery, side A, hyd 1 to coupling	
	WM029162	Tube, fuel delivery, side B, hyd 1 to coupling	
	WM029164	Tube, fuel delivery, side A, hyd 2 to coupling	
	WM029170	Tube, fuel delivery, side B, hyd 2 to coupling	
	WM029172	Tube, fuel delivery, side A, hyd 3 to coupling	
	WM029177	Tube, fuel delivery, side A, hyd 4 to coupling	
	WM029179	Tube, fuel delivery, side B, hyd 4 to coupling	
	WM029175	Tube, fuel delivery, side B, hyd 3 to coupling	
	WM029198	Tube, fuel delivery, side A, hyd 1 duplex valve (L) - coupling	
	WM029200	Tube, fuel delivery, side B, hyd 1 duplex valve (L) - coupling	
	WM029269	Tube, fuel delivery, side A, hyd 1 duplex valve (U) - coupling	
	WM029278	Tube, fuel delivery, side B, hyd 1 duplex valve (U) - coupling	

No.	Part Number	Description	Amount
	WM029280	Tube, fuel delivery, side A, hyd 2 duplex valve (U) - coupling	
	WM029282	Tube, fuel delivery, side B, hyd 2 duplex valve (U) - coupling	
	WM053095	Tube, fuel delivery, side A, hyd 1 hose connection 1A	
	WM053097	Tube, fuel delivery, side A, hyd 2 hose connecti0n 2A	
	WM053102	Tube, fuel delivery, side A, hyd 4 hose connection 4A	
	WM053100	TUbe, fuel delivery, side A, hyd 3 hose connection 3A	
	WM053106	Tube, fuel delivery, side B, hyd 1 hose connection 1B	
	WM053108	Tube, fuel delivery, side B, hyd 2 hose connection 2B	
	WM053112	Tube, fuel delivery, side B, hyd 4 hose connection 4B	
	WM053110	Tube, fuel delivery, side B, hyd 3 hose connection 3B	
	WM053104	Tube, fuel delivery, side A hyd 5 hose connection 5A	
	WM053115	Tube, fuel delivery, side B hyd 5 hose connection 5B	
	WM053121	Tube, fuel delivery, side A, hyd 1 hose connection 1B	
	WM053123	Tube, fuel delivery, side A, hyd 2 hose connection 2B	
	WM053127	Tube, fuel delivery, side A, hyd 4 hose connection 4B	
	WM053129	Tube, fuel delivery, side A hyd 5 hose connection 5B	
	WM053125	Tube, fuel delivery, side A, hyd 3 hose connection 3B	
	WM053145	Tube, fuel delivery, side A coupling - hose connection 1A	

No.	Part Number	Description	Amount
	WM053147	Tube, fuel delivery, side B coupling - hose connection 1B	
	WM053150	Tube, fuel delivery, side A coupling - hose connection 2A	
	WM053152	Tube, fuel delivery, side B coupling - hose connection 2B	
	WM053173	Tube, fuel delivery, side A, hyd 3 hose connection 2A	
	WM053177	Tube, fuel delivery, side A, hyd 4 hose connection 3A	
	WM053179	Tube, fuel delivery, side B, hyd 4 hose connection 3B	
	WM053175	Tube, fuel delivery, side B, hyd 3 hose connection 2B	
	WM053200	Tube, fuel delivery, side A, hyd 1 duplex valve (U) - hose connection 2A	
	WM053202	Tube, fuel delivery, side B, hyd 1 duplex valve (U) - hose connection 2B	
	WM053212	Tube, fuel delivery, side A coupling - hose connection 1A, SAT model	
	WM053214	Tube, fuel delivery, side B coupling - hose connection 1B, SAT model	
	WM053234	Tube, fuel delivery, side A, hyd 1 duplex valve (L), SAT	
	WM053237	Tube, fuel delivery, side A, hyd 2 duplex valve (L), SAT	
	WM053239	Tube, fuel delivery, side B, hyd 1 duplex valve (L), SAT	
	WM053241	Tube, fuel delivery, side B, hyd 2 duplex valve (L), SAT	
	WM053254	Tube, fuel delivery, side A coupling - hose connection 1B	
	WM053256	Tube, fuel delivery, side A coupling - hose connection 2B	
	WM053265	Tube, fuel delivery, side A, hyd 4 hose connection 3B	

No.	Part Number	Description	Amount
	WM053263	Tube, fuel delivery, side A, hyd 3 hose connection 2B	
	WM053272	Tube, fuel delivery, side A, hyd 1 duplex valve (U) - hose connection 2B	
	WM053278	Tube, fuel delivery, side B, hyd 1 hose connection 1A	
	WM053288	Tube, fuel delivery, side A, hyd 4 hose connection 2A	
	WM053290	Tube, fuel delivery, side B, hyd 4 hose connection 2B	
	WM053282	Tube, fuel delivery, side A, hyd 2 hose connection 1A	

See also Hydraulic configurations (tubes) page 13.

10.2 Vapor recovery tubes

10.2.1 Helix 1000

No.	Part Number	Description	Amount
1	WM053370	Tube, vapour, side A di/do 8/10, pump - ground	
2	WM053372	Tube, vapour, side B di/do 8/10, pump - ground	
3	WM053589	Tube, vapour id/od 8/10, Vapourgate - hoseconnect, side B	
4	WM053603	Tube, vapour id/od 8/10, Vapourgate - hoseconnect, side A	
5	WM053723	Tube, vapour id/od 8/10, solenoid - hoseconnect, side B	
6	WM053724	Tube, vapour id/od 8/10, solenoid - hoseconnect, side A	
7	WM040693	Tube, vapour do 10, damper, Vapourgate	
8	WM040697	Tube, vapour do 10, damper - solenoid, side A	
9	WM022102	Tube, flexible, Vapourgate, valve - pump	
10	WM055163	Tube, vapour straight, l=85	
11	WM055167	Tube, vapour T-con. - Vapourgate, side A	
12	WM055169	Tube, vapour T-con. - Vapourgate, side B	
13	WM055171	Tube, vapour hose con. - T-con. side B	

No.	Part Number	Description	Amount
14	WM021787	Tube, vapour, vapourgate, prop.valve - filter, A and B side	
15	WM055161	Tube, vapour straight, l=45	

10.2.2 Small style (Helix 2000)

No.	Part Number	Description	Amount
1	WR001291	Tube, vapor do 10, solenoid - outlet connection	
2	WR001293	Tube, vapor do 10, solenoid - outlet connection	
3	WR001295	Tube, vapor do 10, solenoid - outlet connection	
4	WR001297	Tube, vapor do 10, solenoid - outlet connection	
5	WR001329	Tube, vapor do 10, vacuum pump - T-connection (Healy)	
6	WR001331	Tube, vapor do 10, vacuum pump - outlet connection (Healy)	
7	WR001333	Tube, vapor do 10, vacuum pump - outlet connection (Healy)	
8	WR001335	Tube, vapor do 10, vacuum pump - t-connection (Healy)	
9	WR001337	Tube, vapor do 10, vacuum pump - outlet connection (Healy)	
10	WR001339	Tube, vapor do 10, vacuum pump - outlet connection (Healy)	
11	WR001340	Tube, vapor do 10, T- connection - outlet connection (Healy)	
12	WR001341	Tube, vapor do 10, T-connection - outlet connection (Healy)	
13	WR001351	Tube, vapor do 10, solenoid-outlet connection, side A - IEC	
14	WR001353	Tube, vapor do 10, solenoid-outlet connection, side A - IEC	
15	WR001355	Tube, vapor do 10, solenoid-outlet connection, side B - IEC	
16	WR001357	Tube, vapor do 10, solenoid-outlet connection, side B - IEC	

No.	Part Number	Description	Amount
17	WR001359	Tube, vapor do 10, solenoid-outlet connection, side A - IEC	
18	WR001361	Tube, vapor do 10, solenoid-outlet connection, side A - IEC	
19	WR001363	Tube, vapor do 10, solenoid-outlet connection, side B - IEC	
20	WR001365	Tube, vapor do 10, solenoid-outlet connection, side B - IEC	
21	WM048756	Tube, vapor di/do 8/10, vapor gate-outlet, down, side A	
22	WM048758	Tube, vapor di/do 8/10, vapor gate-outlet, up, side A	
23	WM048760	Tube, vapor di/do 8/10, vapor gate-outlet, down, side B	
24	WM048762	Tube, vapor di/do 8/10, vapor gate-outlet, up, side B	
25	WM048732	Tube, vapor id/od 8/10, oulet connection side A right	
26	WM048735	Tube, vapor id/od 8/10, oulet connection side A left	
27	WM048714	Tube, vapor id/od 8/10 ,oulet connection side B right	
28	WM048727	Tube, vapor id/od 8/10, oulet connection side B left	
29	WM048738	Tube, vapor id/od 8/10 , connector down 1A	
30	WM048740	Tube, vapor id/od 8/10, connector up 1A	
31	WM048742	Tube, vapor id/od 8/10, connector down 1B	
32	WM048745	Tube, vapor id/od 8/10, connector up 1B	

10.2.3 H-style (Helix 4000, Helix 5000)

No.	Part Number	Description	Amount
	WM040683	Tube, vapor do 10, vapor Gate - column, left	
	WM040686	Tube, vapor do 10, vapor Gate - column, nar-row, right	

No.	Part Number	Description	Amount
	WM040689	Tube, vapor do 10, vapor Gate - column, wide, right	
	WM041197	Tube, vapor do 10, solenoid - column, side B	
	WM041199	Tube, vapor do 10, solenoid - column, narrow, side A	
	WM041201	Tube, vapor do 10, solenoid - column, wide, side A	
	WM047586	Tube, vapor do 10, check valve - column, wide, right	
	WM047588	Tube, vapor do 10, check valve - column, left	
	WM047590	Tube, vapor do 10, check valve - column, right	
	WM048617	Tube, vapor id/od 8/10 (Healy)	
	WM048619	Tube, vapor id/od 8/10 (Healy, narrow)	
	WM048620	Tube, vapor id/od 8/10 (Healy)	
	WM048622	Tube, vapor id/od 8/10 (Healy, wide)	

10.2.4 C-style (Helix 6000)

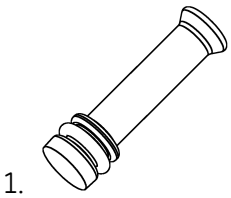

No.	Part Number	Description	Amount
1	WM031400	Plug	
		Tube, hose adapter - hose adapter	
	WM028933	- L=141 (each)	
	WM029405	- L=281 (every two)	
	WM029407	- L=450 (every third)	
	WM056270	- L=560 (every Fourth)	
	WM053456	Tube, vapor do10, solenoid - hose connection 1A	
	WM053458	Tube, vapor do10, solenoid - hose connection 1B	

No.	Part Number	Description	Amount
	WM053460	Tube, vapor do10, solenoid - hose connection 2A	
	WM053462	Tube, vapor do10, solenoid - hose connection 2B	
	WM053464	Tube, vapor do10, solenoid - hose connection 3A	
	WM053466	Tube, vapor do10, solenoid - hose connection 3B	
	WM053470	Tube, vapor do10, solenoid - hose connection 4A	
	WM053473	Tube, vapor do10, solenoid - hose connection 4B	
	WM053475	Tube, vapor do10, solenoid - hose connection 5A	
	WM053477	Tube, vapor do10, solenoid - hose connection 5B	
	WM053494	Tube, vapor do10, vapour gate - hose connection 1A	
	WM053504	Tube, vapor do10, vapour gate - hose connection 1B	
	WM053509	Tube, vapor do10, vapour gate - hose connection 2A	
	WM053511	Tube, vapor do10, vapour gate - hose connection 2B	
	WM053516	Tube, vapor do10, vapour gate - hose connection 3A	
	WM053523	Tube, vapor do10, vapour gate - hose connection 3B	
	WM053532	Tube, vapor do10, vapour gate - hose connection 4A	
	WM053538	Tube, vapor do10, vapour gate - hose connection 4B	
	WM053540	Tube, vapor do10, vapour gate - hose connection 5A	
	WM053542	Tube, vapor do10, vapour gate - hose connection 5B	

No.	Part Number	Description	Amount
	WM053813	Tube, vapor do10, check valve - vapour gate, side A	
	WM053816	Tube, vapor do10, check valve - vapour gate, side B	
	WM053845	Tube, vapor do10, check valve - hose connection 1A	
	WM053847	Tube, vapor do10, check valve - hose connection 1B	
	WM053850	Tube, vapor do10, check valve - hose connection 2A	
	WM053853	Tube, vapor do10, check valve - hose connection 2B	
	WM053856	Tube, vapor do10, check valve - hose connection 3A	
	WM053858	Tube, vapor do10, check valve - hose connection 3B	
	WM053860	Tube, vapor do10, check valve - hose connection 4A	
	WM053862	Tube, vapor do10, check valve - hose connection 4B	

DESCRIPTION OF CHANGE

HELIX 6000 VR TUBES WITH VAPOR GATE AND CHECK VALVE, SUCTION AND REMOTE

TUBES TO VAPOR RETURN CONNECTION SUCTION	
BALLOON	TUBE
1	WM054060
2	WM048989

TUBES TO VAPOR RETURN CONNECTION REMOTE	
BALLOON	TUBE
1	WM051582
2	WM051586

FLEX TUBES VR PUMP TO VALVE SUCTION	
BALLOON	TUBE
3	WM046374-0001
4	WM046373-0002

FLEX TUBES VR PUMP TO VALVE REMOTE	
BALLOON	TUBE
3	WM046374-0001
4	WM046374-0003

TUBES AND PLUG INTO HOSE CONNECTORS	
BALLOON	TUBE
5	WM028933
or every two	WM029405
or every third	WM029407
6	WM031400, PLUG

TUBES VALVE TO DAMPER	
BALLOON	TUBE
7	WM040695
8	WM040697

TUBE DAMPER TO VAPOR GATE	
BALLOON	TUBE
9	WM040693

TUBES VAPOR Gate TO CHECK VALVE	
BALLOON	TUBE
10	WM053816
11	WM053813

TUBES CHECK VALVE B-SIDE TO HOSE CONNECTORS	
TO HOSE CONNECTOR	BALLOON 12
1A	WM053845
2A	WM053850
3A	WM053856
4A	WM053860
5A	WM053864

TUBES CHECK VALVE A-SIDE TO HOSE CONNECTORS	
TO HOSE CONNECTOR	BALLOON 13
1B	WM053847
2B	WM053853
3B	WM053858
4B	WM053862
5B	WM053866

Preliminary

NOZZLES SIDE B

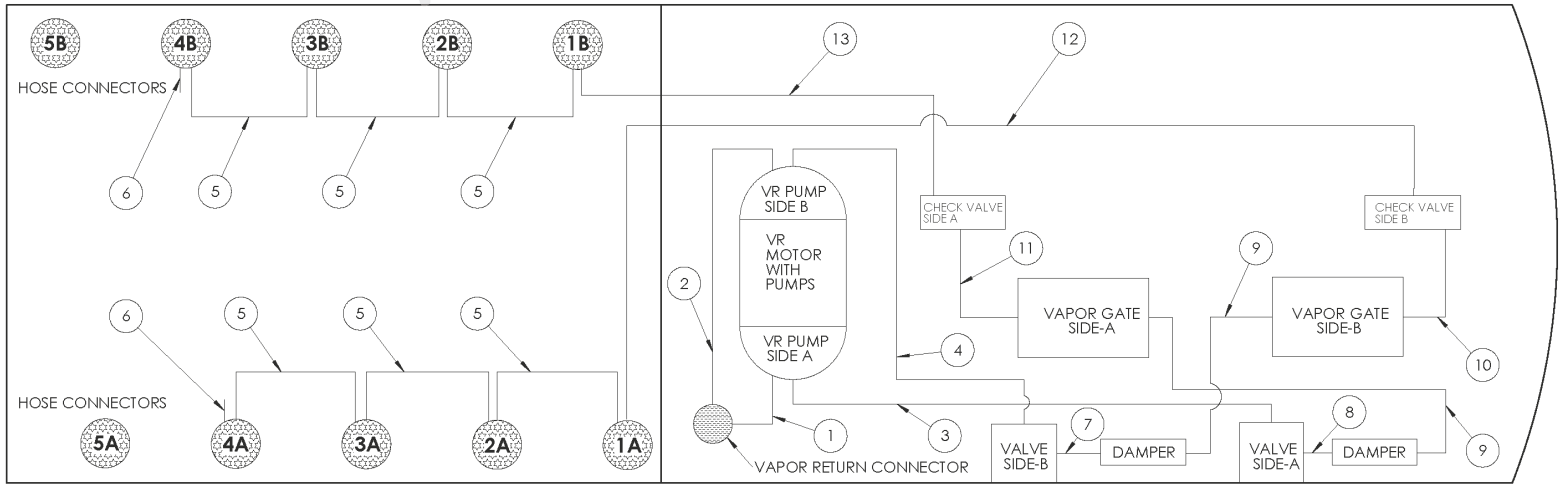

NOZZLES SIDE A

NOTE: FOR REMOTE THE VR PUMPS ARE MOUNTED IN THE MIDDLE OF HYDRAULIC CABINETT

UNLESS NOTED OTHERWISE, DIMENSIONS ARE IN mm

PROPRIETARY INFORMATION - THIS DOCUMENT CONTAINS PROPRIETARY AND CONFIDENTIAL INFORMATION. IT IS LOANED FOR LIMITED PURPOSES ONLY AND REMAINS THE PROPERTY OF THE WAYNE DIVISION. IT MAY NOT BE REPRODUCED IN WHOLE OR IN PART WITHOUT THE WRITTEN CONSENT OF THE WAYNE DIVISION AND MUST NOT BE DISCLOSED TO PERSONS NOT HAVING NEED OF SUCH DISCLOSURE CONSISTENT WITH THE PURPOSE OF THE LOAN. IT MUST NOT BE USED FOR ANY PURPOSE OTHER THAN FOR THE BENEFIT OF THE WAYNE DIVISION. THIS DOCUMENT IS TO BE RETURNED TO THE WAYNE DIVISION UPON REQUEST, AND/OR UPON COMPLETION OF THE USE FOR WHICH IT WAS LOANED.

APPROVED BY			
DRAWN BY	REV	DATE	ECN NO.

NOTE:

HOSE CONNECTORS 1B - 5B BELONGS TO NOZZLES ON SIDE A
HOSE CONNECTORS 1A - 5A BELONGS TO NOZZLES ON SIDE B

TUBES TO HOSE CONNECTORS DEPENDS ON THE FIRST VR POSITION BY EXAMPLE: IS DIESEL ON NOZZLE POSITION 1, THE TUBES TO HOSE CONNECTORS 2 MUST BE USE

MATERIAL	DEBURR AND BREAK SHARP EDGES	SCALE 1:1	DO NOT SCALE DRAWING	Wayne A GE Energy Business	
THICKNESS					
SURFACE TREATMENT					
SURFACE FINISH	TITLE				DRAWING NO.
GENERAL TOLERANCE					SHEET 1 OF 3 A2
REPLACED BY					

SW FORM REF: WB000246 Revision 01.5

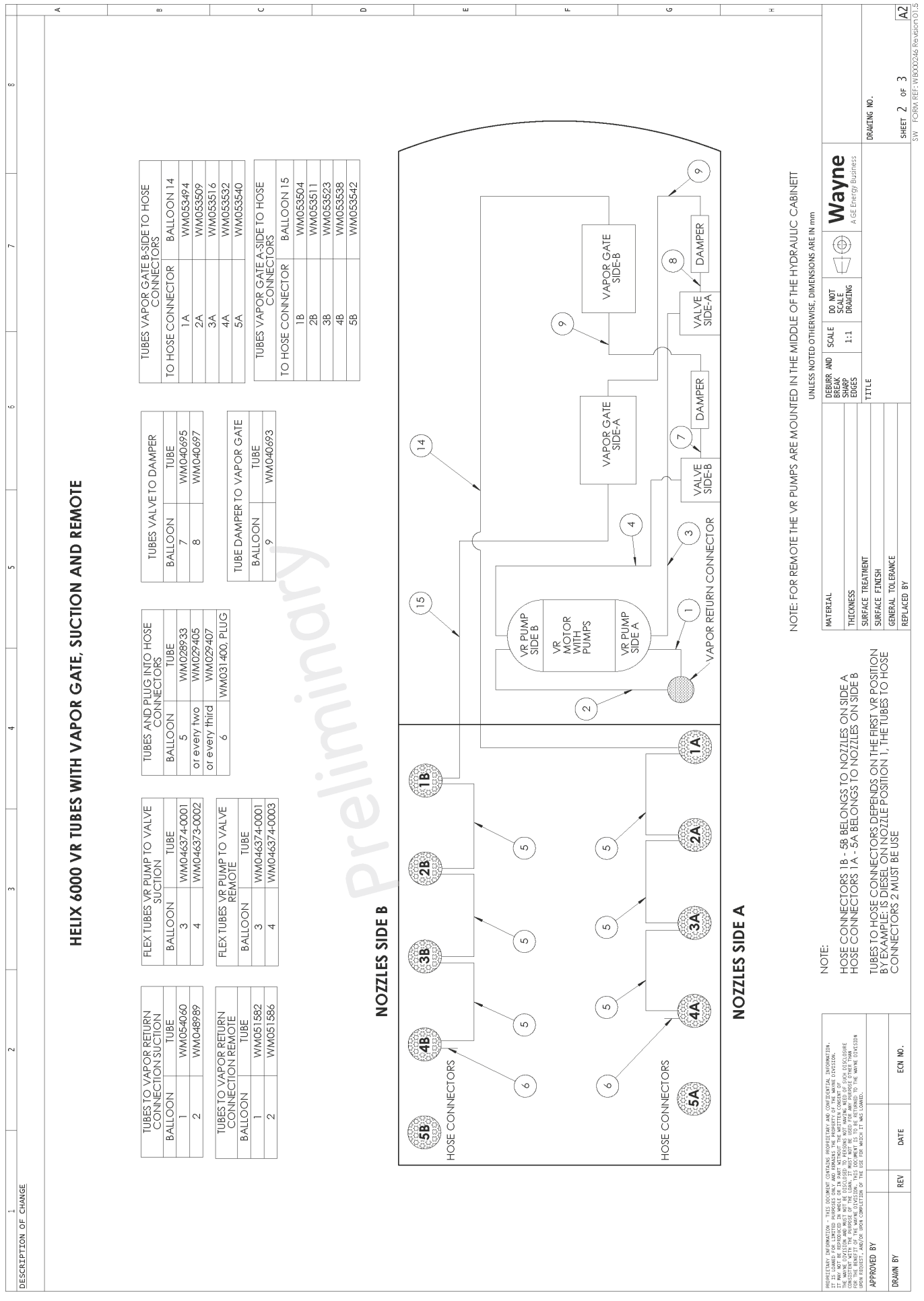
HELIX 6000 VR TUBES WITH VAPOR GATE, SUCTION AND REMOTE
TUBES TO VAPOR RETURN CONNECTION SUCTION
BALLOON | TUBE
1 | WM054060
2 | WM048989
TUBES TO VAPOR RETURN CONNECTION REMOTE
BALLOON | TUBE
1 | WM051582
2 | WM051586
FLEX TUBES VR PUMP TO VALVE SUCTION
BALLOON | TUBE
3 | WM046374-0001
4 | WM046373-0002
FLEX TUBES VR PUMP TO VALVE REMOTE
BALLOON | TUBE
3 | WM046374-0001
4 | WM046374-0003
TUBES AND PLUG INTO HOSE CONNECTORS
BALLOON | TUBE
5 | WM028933
or every two | WM029405
or every third | WM029407
6 | WM031400, PLUG
TUBES VALVE TO DAMPER
BALLOON | TUBE
7 | WM040695
8 | WM040697
TUBE DAMPER TO VAPOR GATE
BALLOON | TUBE
9 | WM040693
TUBES VAPOR GATE B-SIDE TO HOSE CONNECTORS
TO HOSE CONNECTOR | BALLOON 14
1A | WM053494
2A | WM053509
3A | WM053516
4A | WM053532
5A | WM053540
TUBES VAPOR GATE A-SIDE TO HOSE CONNECTORS
TO HOSE CONNECTOR | BALLOON 15
1B | WM053504
2B | WM053511
3B | WM053523
4B | WM053538
5B | WM053542
NOZZLES SIDE B
NOZZLES SIDE A
HOSE CONNECTORS
HOSE CONNECTORS
VR PUMP SIDE B
VR MOTOR WITH PUMPS
VR PUMP SIDE A
VAPOR RETURN CONNECTOR
VALVE SIDE-B
VALVE SIDE-A
DAMPER
DAMPER
VAPOR GATE SIDE-A
VAPOR GATE SIDE-B
NOTE: FOR REMOTE THE VR PUMPS ARE MOUNTED IN THE MIDDLE OF THE HYDRAULIC CABINETT
UNLESS NOTED OTHERWISE, DIMENSIONS ARE IN mm
NOTE:
HOSE CONNECTORS 1B - 5B BELONGS TO NOZZLES ON SIDE A
HOSE CONNECTORS 1A - 5A BELONGS TO NOZZLES ON SIDE B
TUBES TO HOSE CONNECTORS DEPENDS ON THE FIRST VR POSITION
BY EXAMPLE: IS DIESEL ON NOZZLE POSITION 1, THE TUBES TO HOSE
CONNECTORS 2 MUST BE USE
MATERIAL
THICKNESS
SURFACE TREATMENT
SURFACE FINISH
GENERAL TOLERANCE
REPLACED BY
DEBURR AND BREAK SHARP EDGES
SCALE 1:1
DO NOT SCALE DRAWING
TITLE
Wayne
A GE Energy Business
DRAWING NO.
SHEET 2 OF 3
A2
SW FORM REF: WB000246 Revision 01.5
PROPRIETARY INFORMATION - THIS DOCUMENT CONTAINS PROPRIETARY AND CONFIDENTIAL INFORMATION. IT IS LOANED FOR LIMITED PURPOSES ONLY, AND REMAINS THE PROPERTY OF THE WAYNE DIVISION. THE WAYNE DIVISION RESERVES ALL PATENT, COPYRIGHT, AND OTHER PROPRIETARY RIGHTS TO THE INFORMATION CONTAINED HEREIN. IT MAY NOT BE DISCLOSED TO PERSONS NOT HAVING NEED FOR SUCH DISCLOSURE CONSISTENT WITH THE PURPOSE OF THE LOAN. IT MUST NOT BE USED FOR ANY PURPOSE OTHER THAN THAT FOR WHICH IT IS LOANED. ALL COPIES MUST BE RETURNED TO THE WAYNE DIVISION UPON REQUEST, AND/OR UPON COMPLETION OF THE USE FOR WHICH IT WAS LOANED.
APPROVED BY
DRAWN BY
DATE
REV
ECN NO.
DESCRIPTION OF CHANGE
Preliminary

DESCRIPTION OF CHANGE

HELIX 6000 VR TUBES WITHOUT VAPOR GATE, SUCTION AND REMOTE

TUBES TO VAPOR RETURN CONNECTION SUCTION	
BALLOON	TUBE
1	WM054060
2	WM048989

TUBES TO VAPOR RETURN CONNECTION REMOTE	
BALLOON	TUBE
1	WM051582
2	WM051586

FLEX TUBES VR PUMP TO VALVE SUCTION	
BALLOON	TUBE
3	WM046374-0001
4	WM046373-0002

FLEX TUBES VR PUMP TO VALVE REMOTE	
BALLOON	TUBE
3	WM046374-0001
4	WM046374-0003

TUBES AND PLUG INTO HOSE CONNECTORS	
BALLOON	TUBE
5	WM028933
or every two	WM029405
or every third	WM029407
6	WM031400, PLUG

TUBES VALVE B-SIDE TO HOSE CONNECTORS	
TO HOSE CONNECTOR	BALLOON 16
1A	WM053456
2A	WM053460
3A	WM053464
4A	WM053470
5A	WM053475

TUBES VALVE A-SIDE TO HOSE CONNECTORS	
TO HOSE CONNECTOR	BALLOON 17
1B	WM053458
2B	WM053462
3B	WM053466
4B	WM053473
5B	WM053477

Preliminary

NOZZLES SIDE B

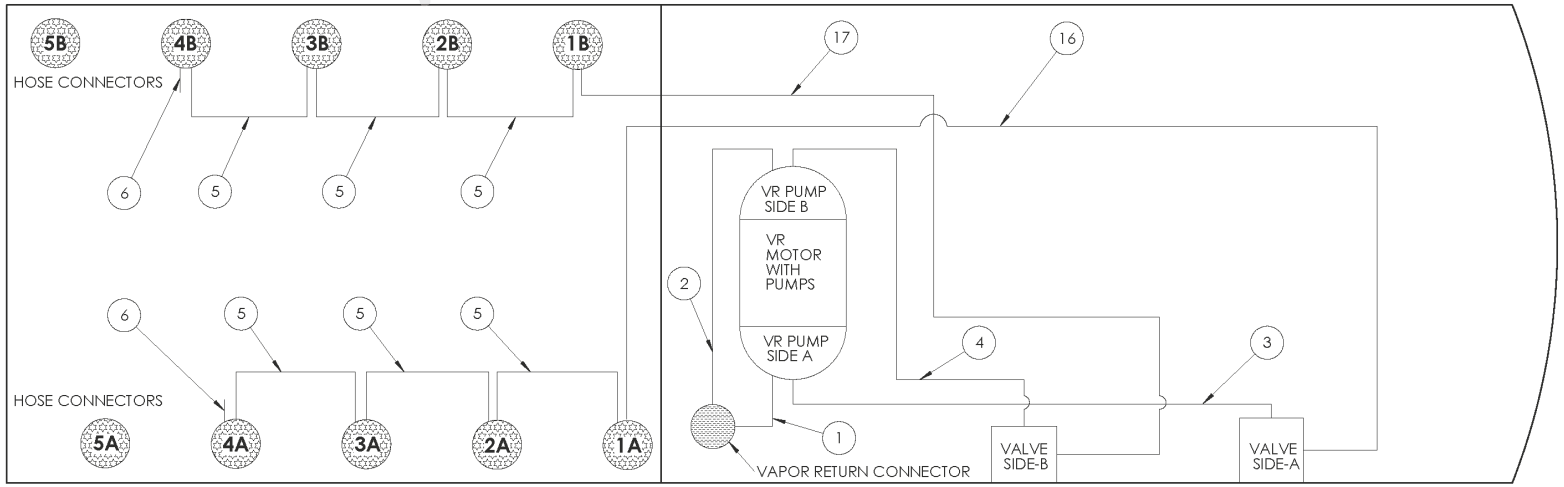

NOZZLES SIDE A

NOTE: FOR REMOTE THE VR PUMPS ARE MOUNTED IN THE MIDDLE OF THE HYDRAULIC CABINETT

NOTE:

HOSE CONNECTORS 1B - 5B BELONGS TO NOZZLES ON SIDE A
HOSE CONNECTORS 1A - 5A BELONGS TO NOZZLES ON SIDE B

TUBES TO HOSE CONNECTORS DEPENDS ON THE FIRST VR POSITION BY EXAMPLE: IS DIESEL ON NOZZLE POSITION 1, THE TUBES TO HOSE CONNECTORS 2 MUST BE USE

PROPRIETARY INFORMATION - THIS DOCUMENT CONTAINS PROPRIETARY AND CONFIDENTIAL INFORMATION. IT IS LOANED FOR LIMITED PURPOSES ONLY AND REMAINS THE PROPERTY OF THE WAYNE DIVISION. IT MAY NOT BE REPRODUCED IN WHOLE OR IN PART WITHOUT THE WRITTEN CONSENT OF THE WAYNE DIVISION AND MUST NOT BE DISCLOSED TO PERSONS NOT HAVING NEED OF SUCH DISCLOSURE CONSISTENT WITH THE PURPOSE OF THE LOAN. IT MUST NOT BE USED FOR ANY PURPOSE OTHER THAN FOR THE BENEFIT OF THE WAYNE DIVISION. THIS DOCUMENT IS TO BE RETURNED TO THE WAYNE DIVISION UPON REQUEST, AND/OR UPON COMPLETION OF THE USE FOR WHICH IT WAS LOANED.

APPROVED BY			
DRAWN BY	REV	DATE	ECN NO.

UNLESS NOTED OTHERWISE, DIMENSIONS ARE IN mm

MATERIAL	DEBURR AND BREAK SHARP EDGES	SCALE 1:1	DO NOT SCALE DRAWING	Wayne A GE Energy Business	
THICKNESS					
SURFACE TREATMENT					
SURFACE FINISH	TITLE				DRAWING NO.
GENERAL TOLERANCE					SHEET 3 OF 3 A2
REPLACED BY					

SW FORM REF: WB000246 Revision 01.5

10.2.5 Common

No.	Part Number	Description	Amount
	WM040693	Tube, vapor do 10, damper - Vapor Gate	
	WM040695	Tube, vapor do 10, damper - solenoid, side B	
	WM040697	Tube, vapor do 10, damper - solenoid, side A	
	WM047582	Tube, vapor di/do 8/10, check valve - Vapor Gate, side B	
	WM047584	Tube, vapor di/do 8/10, check valve - Vapor Gate, side A	
	WM046374-0001	Tube, flexible valve-pump, l=500	
	WM046374-0002	Tube, flexible valve-pump, l=720	
	WM047566	Tube, vapor coupling - Vapor Gate, check valve	
	WM021787	Tube, vapor Vapor Gate, prop.valve - filter, A and B side	
	WM042216	Tube, vapor flanged 7/8" Healy out	
	WM042275	Tube, vapor flanged 7/8" ISD out	
	WM042277	Tube, vapor flanged 7/8" Healy ISD narrow	
	WM042279	Tube, vapor flanged 7/8" ISD out wide	
	WM042281	Tube, vapor flanged 7/8" Healy ISD wide	
	WM054060	Tube, vapour od 10, pump, side A - ground	
	WM048989	Tube, vapour do 10, pump, side B - ground	

10.3 Inlet tubes

WARNING!

Explosive or flammable vapors may accumulate within the dispenser housing. All piping connections in the final installation must be accurately fitted and all threaded joints tightly made up with a Listed gasoline-resistant pipe joint compound. Put the compound on male threads only, being careful not to get excess inside the pipe or fittings. Failure to perform the above will present a hazardous condition that could result in serious injury.

10.3.1 Suction - flexible inlet tubes

NOTICE!

The inlet flexible tube has min bending radius (single motion) = 100 mm.

1. 	2. 		

No.	Part Number	Description	Amount
1		**Inlet tube - std flange**	
	WU007574-0001	- L = 185mm	
	WU007574-0003	- L = 235mm	
	WU007574-0002	- L = 335mm	
2		**Inlet tube - triangular flange**	
	WU007721-0001	- L = 185mm	
	WU007721-0003	- L = 235mm	
	WU007721-0002	- L = 335mm	

10.3.2 Remote - inlet tubes

No.	Part Number	Description	Amount
1	WR001642	Tube dispenser inlet, l=197, iMeter™	1
2	WR001643	Tube dispenser inlet, l=228, iMeter™	1
3	WR001644	Tube dispenser inlet, l=175, iMeter™	1

10.4 Tube between CPU's

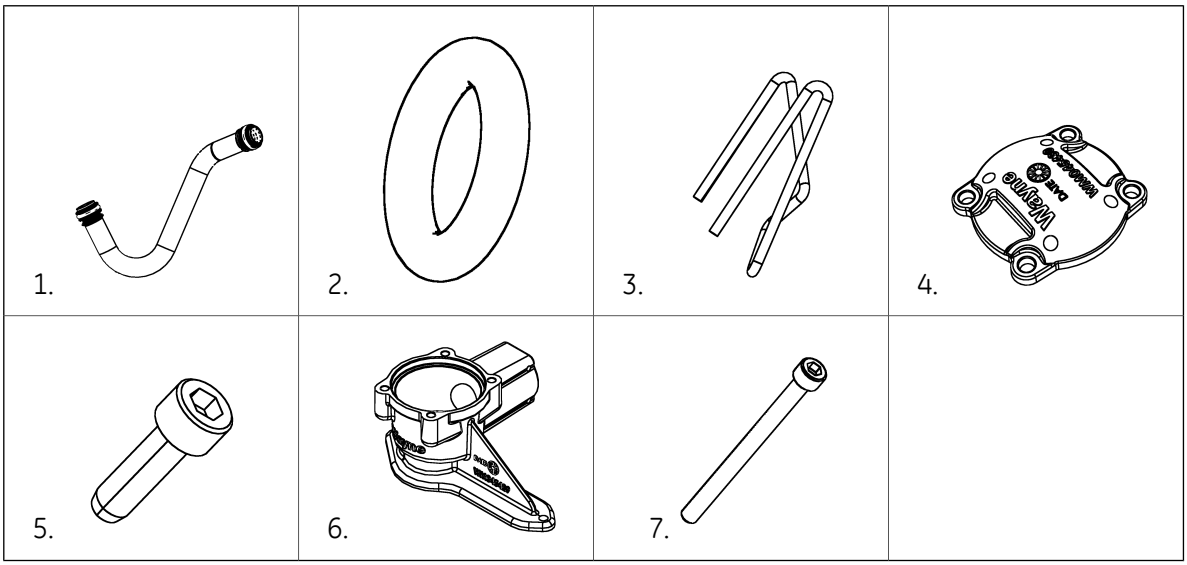

No.	Part Number	Description	Amount
1	WM045663	Tube, fuel delivery id/od 21.4/24 (for checkvalve adapter)	1
2	WM045433	O-ring T=4, ID=58.5	2
3	WM043174	Lock pin wire dia=3,2 mm	2
4	WM045430	Cover	1
5	WB000260-0001	Taptite screw, hexagon socket cap, M6M6x16	4
6	WM045432	Coupling	1
7	WB000211-0001	Screw, hexagon socket cap, M6x16	2

10.5 Tubes, densimeter

No.	Part Number	Description	Amount
	WR001268	Tube inlet densimeter od=1/4" (hyd pos1-Small lane)	
	WR001270	Tube inlet densimeter od=1/4" (hyd pos1-Small island)	
	WR001272	Tube inlet densimeter od=1/4" (hyd pos2-Small lane)	
	WR001274	Tube inlet densimeter od=1/4" (hyd pos2-Small island)	
	WR001282	Tube outlet densimeter od=10 (hyd pos1-Small lane)	

No.	Part Number	Description	Amount
	WR001284	Tube outlet densimeter od=10 (hyd pos1-Small island)	
	WR001286	Tube outlet densimeter od=10 (hyd pos2-Small lane)	
	WR001288	Tube outlet densimeter od=10 (hyd pos2-Small island)	
	WR001316	Tube outlet densimeter od=10 (hyd pos3-H-style narrow)	
	WR001318	Tube outlet densimeter od=10 (hyd pos1-H-style narrow)	
	WR001321	Tube inlet densimeter od=1/4" (hyd pos1-H-style narrow)	
	WR001323	Tube inlet densimeter od=1/4" (hyd pos3-H-style narrow)	
	WR001325	Tube outlet densimeter od=10 (hyd pos2-H-style narrow)	
	WR001327	Tube inlet densimeter od=1/4"(hyd pos2-H-style narrow)	
	WR001343	Tube inlet densimeter od=1/4" (hyd pos1-H-style wide)	
	WR001345	Tube inlet densimeter od=1/4" (hyd pos2-H-style wide)	
	WR001347	Tube inlet densimeter od=1/4" (hyd pos3-H-style wide)	
	WR001349	Tube inlet densimeter od=1/4" (hyd pos4-H-style wide)	
	WR001367	Tube outlet densimeter od=10 (hyd pos1-H-style wide)	
	WR001369	Tube outlet densimeter od=10 (hyd pos2-H-style wide)	
	WR001371	Tube outlet densimeter od=10 (hyd pos3-H-style wide)	
	WR001373	Tube outlet densimeter od=10 (hyd pos4-H-style wide)	

10.6 Conduits

No.	Part Number	Description	Amount
	WM040845	Conduit 1/2" solenoid valve	
	WM040846	Conduit 1/2" solenoid valve	
	WM040855	Conduit 3/4", Wayne VAC	
	WM040858	Conduit 3/4", Wayne VAC	
	WM040859	Conduit 3/4", Wayne VAC	
	WM040860	Conduit 3/4", Wayne VAC	
	WM040875	Conduit 3/4", junction box	
	WM044875	Conduit 1/2", Healy narrow	
	WM045944	Conduit 1/2", Healy wide	
	WM041027	Conduit 1/2", Healy	
	WU007891-0001	Tube, conduit module, potted, call button	
	WM044876	Tube, conduit 3/4", (junction box)	
	WU008241-0001	Tube, conduit healy module, potted, narrow	
	WU008242-0001	Tube, conduit healy module, potted, wide	

10.7 Conduit accessories

No.	Part Number	Description	Amount
	WM048316-0001	Gasket sealing, l=206mm	
	WM048316-0002	Gasket sealing, l=180mm	
	WM048316-0003	Gasket sealing, l=43mm	
	WM048316-0004	Gasket sealing, l=318mm	
	WM048316-0005	Gasket sealing, l=76mm	
	WM048316-0006	Gasket sealing, l=63.5mm	
	WM048316-0007	Gasket sealing, l=80mm	
	WU007059	Sealing compound, rockite cement	
	WM045471-0001	Seal conduit 1/2"	
	WM045471-0002	Seal conduit 3/4"	
	WM045407-0001	Washer conduit (1/2")	
	WM045407-0002	Washer conduit (3/4")	

No.	Part Number	Description	Amount
	WM046113	Magnet, ring OD=30; ID=21,75; T=4	
	WU007087	Coupling 3/4 NPT conduit union	

10.8 Couplings, IEC Vapor Recovery

No.	Part Number	Description	Amount
	WM020433	Coupling, 90 degree male we 1/4" d=10	
	WM020593	Coupling, straight male ge 1/4" d=10	
	WM047564	Coupling, cross k d=10	
	WM020460	Coupling, T-coupling t d=10	
	WM020453	Coupling, T-coupling male te 1/4" d=10	

10.9 Couplings, UL Vapor Recovery, common

No.	Part Number	Description	Amount
1	WM042419	Coupling, cross 1" x 1" x 3/4" x 3/4"	
2	WM002001	Plug screw cut 1" - 11 NPTF X 19.05mm long	
3	WM042421	Coupling, straight flare fitting for 7/8" odt with 3/4"-14	
4	WU007084	Washer, plain 28.8 od x 18.3 id, flare	
5	WU007085	Bushing reducer, 3/4 to 3/8 hex	
6	WT002795-0004	Plug hexagon socket 3/4 " NPT male	

10.10 Couplings, UL Healy Vapor Recovery

No.	Part Number	Description	Amount
	WU002005-0001	Coupling, 90 degree 3/4-14 NPT X 1/2-14 NPT	
	WM042428	Coupling 1/2" NPT conduit Union	
	WU007399-0001	Coupling, cross 3/8 NPT	
	WU007412-0001	Coupling fitting, copmression 3/8 NPT - 10mm tube	
	WU002669-0001	Inlet nipple	
	WU007720-0001	Plug, 3/8" NPT	
	WU007703-0001	Ball valve, 3/8 NPT MxF UL listed	
	WU007625-0001	Coupling union 10mm to 10mm tube	

10.11 Couplings, densimeter

No.	Part Number	Description	Amount
	WR001275	Coupling, straight reduction, 1/4" NPT - 1/8" NPT	
	WR001276	Coupling, straight male 1/8" NPT, D=1/4"	
	WR001279	Coupling, 90 degree female 5/8" UNF, male 1/4"NPT, D=10	
	WR001280	Coupling, straight female/male 1/4" NPT	
	WR001223	Coupling	

11 Hanging hardware

11.1 Nozzle

No.	Part Number	Description	Amount
	WM044544	Lever assist, kit, Elaflex nozzles	
	WM026214-0004	19mm, 8, spout Id=21/od=25, drip stop, Elaflex	
	WM026217-0002	19mm, 8D, spout id=21/od=25, black, Elaflex	
	WM026217-0003	19mm, 8D, spout id=16/od=21, green, Elaflex	
	WM026217-0004	19mm, 8D, spout id=16/od=21, black DSA, Elaflex	
	WM026217-0005	19mm, 8D, spout id=16/od=25, black DSA, Elaflex	
	WM026217-0007	19mm, 8D, spout id=21/od=25, black, drip stop, DSA, Elaflex	
	WM026217-0008	19mm, 8D, spout id=21/od=25, black, drip stop, UK, lever assist, Elaflex	
	WM026217-0009	19mm, 8D, spout id=16/od=21, black DSA lever assist, Elaflex	
	WM026217-0010	19mm, 8D, spout id=21/od=25, black lever assist, Elaflex	
	WM026217-0011	19mm, 8D, spout id=16/od=21, green lever assist, Elaflex	
	WM026217-0012	19mm, 8D, spout id=21/od=25, black lever assist, Elaflex	
	WM026217-0013	19mm, 8D, spout id=21/od=25, black, drip stop, lever assist, Elaflex	
	WM026219-0003	VR, 8D, spout od=25, Elaflex	
	WM026219-0004	VR, 8D, spout od=21, DSA, Elaflex	
	WM026220-0001	VR, 8D, spout od=21, green, Elaflex	
	WM026220-0004	VR, 8D, spout od=21, green with lever assist, Elaflex	
	WM026221-0003	VR, id=16/od=21, green, with break-away, Elaflex	
	WM026221-0004	Id=21/od=25, black, with break, LT, Elaflex	
	WM026221-0002	Id=21/od=25, black, with break, std, Elaflex	

No.	Part Number	Description	Amount
	WM026221-0008	Id=16/od=21, with break, std, Elaflex	
	WM026221-0007	Id=16/od=21, with break, LT, Elaflex	
	WM023228	8D, od=31, black with break-away	
	WR001420-0001	19mm, 4, spout id=19/od=25, Elaflex nozzle type: ZVA 4.3 Slimline	
	WR001420-0002	16mm, 4, spout id=17/od=21, Elaflex nozzle type: ZVA 4.3R Slimline	
	WR001421-0001	4, spout id=25/od-31, Elaflex nozzle type: ZVA 25.45R	
	WR001422-0001	7H, spout od=30, OPW, Inlet 1"NPT	
	WR001423-0001	7HB, spout od=30, OPW, Inlet 1"NPT	
	WR001424-0001	11BP, spout od=21, OPW, inlet 3/4"NPT	
	WR001425-0001	11B, spout od=25, OPW, inlet 3/4"NPT	
	WR001426-0001	11A, spout od=25, OPW, Inlet 3/4"NPT	
	WR001427-0001	11AP, spout od=21, OPW inet 3/4"NPT	
	WR001430-0001	11BP, spout od=21, AILE A2101 11BP, inlet 3/4"NPT	

11.2 Nozzle covers

No.	Part Number	Description	Amount
	WM026428-0002	Cover, moulded, black, Elaflex	
	WM026428-0005	Cover, moulded, blue, Elaflex	
	WM026428-0010	Cover, moulded, BP dark blue, Elaflex	
	WM026428-0011	Cover, moulded, BP light blue, Elaflex	
	WM026428-0007	Cover, moulded, green, Elaflex	
	WM026428-0008	Cover, moulded, light green, Elaflex	
	WM026428-0001	Cover, moulded. orange, Elaflex	
	WM026428-0006	Cover, moulded, red, Elaflex	
	WM026428-0003	Cover, moulded. white, Elaflex	
	WM026428-0004	Cover, moulded. yellow, Elaflex	
	WM026428-0009	Cover, moulded, light yellow, Elaflex	
	WM002337-0001	Cover, moulded VR, yellow	

No.	Part Number	Description	Amount
	WR001391-0001	Moulded cover, nozzle 3/4", black, AILE, 11B-C03-black used on A2101-11B&BP	
	WR001391-0002	Moulded cover, nozzle 3/4", yellow, AILE, 11B-C03-yellow used on A2101-11B&BP	
	WR001391-0003	Moulded cover, nozzle 3/4", gray, AILE, 11B-C03-gray used on A2101-11B&BP	
	WR001391-0004	Moulded cover, nozzle 3/4", red, AILE, 11B-C03-red used on A2101-11B&BP	
	WR001391-0005	Moulded cover, nozzle 3/4", green, AILE, 11B-C03-green used on A2101-11B&BP	
	WR001391-0006	Moulded cover, nozzle 3/4", blue, AILE, 11B-C03-blue used on A2101-11B&BP	
	WR001392-0001	Moulded cover, nozzle 3/4", black, OPW 6BBL-0400-black used on ASTRO-B	
	WR001392-0002	Moulded cover, nozzle 3/4", yellow, OPW 6BY-0900-yellon used on ASTRO-B	
	WR001392-0003	Moulded cover, nozzle 3/4", gray, OPW 6BS-0200-gray used on ASTRO-B	
	WR001392-0004	Moulded cover, nozzle 3/4", red, OPW 6BR-0300-red used on ASTRO-B	
	WR001392-0005	Moulded cover, nozzle 3/4", green, OPW 6BG-0100-green used on ASTRO-B	
	WR001392-0006	Moulded cover, nozzle 3/4", blue, OPW 6BB-0500-blue used on ASTRO-B	
	WR001393-0001	Moulded cover, nozzle 1", black, OPW 6SBB-0400-black used on 7HB	
	WR001393-0002	Moulded cover, nozzle 1", yellow, OPW 6SBY-0900-yellow used on 7HB	
	WR001393-0003	Moulded cover, nozzle 1", green, OPW 6SG-0100-green used on 7HB	
	WR001394-0001	Moulded cover, nozzle 1", black, OPW 6SB-0400-black used on 7H	
	WR001394-0002	Moulded cover, nozzle 1", yellow, OPW 6SY-0900-yellow used on 7H	
	WR001394-0003	Moulded cover, nozzle 1", gray, OPW 6SB-0250-gray used on 7H	

No.	Part Number	Description	Amount
	WR001394-0004	Moulded cover, nozzle 1", green, OPW 6SG-0100-green used on 7H	
	WR001405-0001	Moulded cover, nozzle 3/4", black, OPW 11AP-0400-black used on 11AP	
	WR001405-0002	Moulded cover, nozzle 3/4", yellow, OPW 11AP-0900-yellow used on 11AP	
	WR001405-0003	Moulded cover, nozzle 3/4", gray, OPW 11AP-0250-gray used on 11AP	
	WR001405-0004	Moulded cover, nozzle 3/4", red, OPW, insulator 11AP-0300-red used on 11AP	
	WR001405-0005	Moulded cover, nozzle 3/4", green, OPW 11AP-0100-green used on 11AP	
	WR001405-0006	Moulded cover, nozzle 3/4", blue, OPW 11AP-0500-blue used on 11AP	
	WR001405-0007	Moulded cover, nozzle 3/4", gold, OPW 11AP-0750-gold used on 11AP	
	WR001405-0008	Moulded cover, nozzle 3/4", orange, OPW 11AP-0800-orange used on 11AP	
	WR001408-0001	Moulded cover, nozzle 1 1/4", black, OPW 6ABL-5400-black used on 12VW	
	WR001408-0002	Moulded cover, nozzle 1 1/4", blue, OPW 6AB-5500-blue used on 12VW	

11.3 Splashguards

No.	Part Number	Description	Amount
	WM026471-0001	Splash guard, id=24, od=82, yellow, Elaflex	
	WM026471-0002	Splash guard, id=24, od=82, green, Elaflex	
	WM026471-0003	Splash guard, id=24, od=82, blue, Elaflex	
	WM026471-0004	Splash guard, id=24, od=82, red, Elaflex	
	WM026471-0005	Splash guard, id=24, od=82, black, Elaflex	
	WM026471-0006	Splash guard, id=24, od=82, green, text UK, Elaflex	
	WM026471-0007	Splash guard, id=24, od=82, BP light blue, text NL, Elaflex	

No.	Part Number	Description	Amount
	WM026471-0008	Splash guard, id=26, od=92, BP light blue, PL, Elaflex	
	WM026471-0009	Splash guard, id=24, od=82, BP light blue, text PT, Elaflex	
	WM026471-0010	Splash guard, id=24, od=82, BP light blue, text ES, Elaflex	
	WM026471-0011	Splash guard, id=26, od=92, BP light blue, FR, Elaflex	
	WM026471-0012	Splash guard, id=26, od=92, BP dark blue, NL, Elaflex	
	WM026471-0013	Splash guard, id=26, od=92, BP dark blue, PL, Elaflex	
	WM026471-0014	Splash guard, id=26, od=92, BP dark blue, PT, Elaflex	
	WM026471-0015	Splash guard, id=26, od=92, BP dark blue, ES, Elaflex	
	WM026471-0016	Splash guard, id=26, od=92, BP dark blue, FR, Elaflex	
	WM026471-0017	Splash guard, id=26, od=92, BP dark blue, AT, Elaflex	
	WM026471-0018	Splash guard, id=26, od=92, BP dark blue, UK, Elaflex	
	WM026471-0019	Splash guard, id=26, od=92, BP light blue, AT, Elaflex	
	WR001386-0001	Splash guard, id=20, od=113, black, OPW model 8BL-0400 black (for nozzle 3/4")	
	WR001386-0002	Splash guard, id=20, od=113, yellow-CE-ATEX, OPW model 8Y-0900 yellow-CE/ATEX (for nozzle 3/4")	
	WR001386-0003	Splash guard, id=20, od=113, yellow, OPW model 8Y-0900 yellow (for nozzle 3/4")	
	WR001386-0004	Splash guard, id=20, od=113, silver, OPW model 8S-0200 silver (for nozzle 3/4")	
	WR001386-0005	Splash guard, id=20, od=113, red, OPW model 8R-0300 red (for nozzle 3/4")	

No.	Part Number	Description	Amount
	WR001386-0006	Splash guard, id=20, od=113, green, OPW model 8G-0100 green (for nozzle 3/4")	
	WR001386-0007	Splash guard, id=20, od=113, blue, OPW model 8B-0500 blue (for nozzle 3/4")	
	WR001387-0001	Splash guard, id=32, od=113, black, OPW model 8HBL-0400 black (for nozzle 1")	
	WR001387-0002	Splash guard, id=32, od=113, black-CE-ATEX, OPW model 8BL-0400 black CE/ATEX (for nozzle 1")	
	WR001387-0003	Splash guard, id=32, od=113, yellow, OPW model 8HY-0900 yellow (for nozzle 1")	
	WR001387-0004	Splash guard, id=32, od=113, yellow-CE-ATEX, OPW model 8HY-0900 yellow CE/ATEX (for nozzle 1")	
	WR001387-0005	Splash guard, id=32, od=113, silver, OPW guard model 8HBL-0250 silver (for nozzle 1")	
	WR001387-0006	Splash guard, id=32, od=113, red, OPW model 8HBL-0300 red (for nozzle 1")	
	WR001387-0007	Splash guard, id=32, od=113, green, OPW model 8HG-0100 green (for nozzle 1")	
	WR001387-0008	Splash guard, id=32, od=113, blue, OPW model 8HBL-0500 blue (for nozzle 1")	
	WR001388-0001	Splash guard, id=21, od=107, black, AILE, (nozzle 3/4"): 11A / 11AP / 11B / 11BP / 13A / 13AP	
	WR001388-0002	Splash guard, id=21, od=107, yellow, AILE, (nozzle 3/4"): 11A / 11AP / 11B / 11BP / 13A / 13AP	
	WR001388-0003	Splash guard, id=21, od=107, silver, AILE, (nozzle 3/4"): 11A / 11AP / 11B / 11BP / 13A / 13AP	
	WR001388-0004	Splash guard, id=21, od=107, red, AILE, (nozzle 3/4"): 11A / 11AP / 11B / 11BP / 13A / 13AP	
	WR001388-0005	Splash guard, id=21, od=107, green, AILE, (nozzle 3/4"): 11A / 11AP / 11B / 11BP / 13A / 13AP	
	WR001388-0006	Splash guard, id=21, od=107, blue, AILE, (nozzle 3/4"): 11A / 11AP / 11B / 11BP / 13A / 13AP	

11.4 Hose

See also "Bayonet coupling" page 224.

No.	Part Number	Description	Amount
		Goodyear hoses 3.02m	
	WR001572-0001	- ID=16mm, black	
	WR001571-0001	- ID=19mm, black	
	WR001605-0001	- ID=25mm, black	
		Goodyear hoses 3.65m	
	WR001446-0001	- ID=16mm, black	
	WR001441-0001	- ID=19mm, black	
	WR001604-0001	- ID=25mm, black	
		Goodyear hoses 4.30 m	
	WR001574-0001	- ID=16mm, black	
	WR001573-0001	- ID=19mm, black	
	WR001602-0001	- ID=25mm, black	
		Goodyear hoses 4.90m	
	WR001450-0001	- ID=16mm, black	
	WR001444-0001	- ID=19mm, black	
	WR001601-0001	- ID=25mm, balck	
		Goodyear hoses 9.00m	
	WR001576-0001	- ID=16mm, black	
	WR001575-0001	- ID=19mm, black	
		IRPCO hoses 3.02m	
	WR001596-0001	- ID=19mm, black	
	WR001606-0001	- ID=25mm, black	
		IRPCO hoses 4.30m	
	WR001598-0001	- ID=19mm, black	
	WR001603-0001	- ID=25mm, black	
		IRPCO hoses 4.90m	
	WR001600-0001	- ID=19mm, black	
	WR001437-0001	- ID=25mm, black	

No.	Part Number	Description	Amount
		Elaflex hoses 3.02m (non LT)	
	WM046775-0001	- Non LT SL 16mm, male THD, R1" BSP - 3/4"	
	WM046777-0001	- Non LT SL 21mm, male THD, R1" BSP - 1"	
	WM046779-0001	- VR Non LT 21mm, M34x1,5 - M34x1,5	
		Elaflex hoses 4.30m (non LT)	
	WM046775-0004	- Non LT SL 16mm, male THD, R1" BSP - 3/4"	
	WM046777-0004	- Non LT SL 21mm, male THD, R1" BSP - 1"	
	WM046779-0003	- VR Non LT 21mm, M34x1,5 - M34x1,5	
		Elaflex hoses 4.90m (non LT)	
	WM046775-0007	- Non LT SL 16mm, MALE THD, R1" BSP - 3/4"	
	WM046777-0007	- Non LT SL 21mm, MALE THD, R1" BSP - 3/4"	
	WM046779-0005	- VR Non LT 21mm, M34x1,5 - M34x1,5	
		Elaflex hoses 9.00m (non LT)	
	WM046775-0013	- Non LT SL 16mm, male THD, R1" BSP - 3/4"	
	WM046777-0013	- Non LT SL 21mm, male THD, R1" BSP - 1"	
		Elaflex low temp hoses 3.02m	
	WM046775-0002	- LT SL 16 mm, male THD, R1" BSP - 3/4"	
	WM046777-0002	- LT SL 21 mm, male THD, R1" BSP - 1"	
	WM046779-0002	- VR LT 21mm, M34x1,5 - M34x1,5	
		Elaflex low temp hoses 4.30m	
	WM046775-0005	- LT SL 16 mm, male THD, R1" BSP - 3/4"	
	WM046777-0005	- LT SL 21 mm, MALE THD, R1" BSP - 1"	
	WM046779-0004	- VR LT 21mm, M34x1,5 - M34x1,5	
		Elaflex low temp hoses 4.90m	
	WM046775-0008	- LT SL 16 mm, male THD, R1" BSP - 3/4"	
	WM046777-0008	- LT SL 21 mm, male THD, R1" BSP - 3/4"	
	WM046779-0006	- VR LT 21mm, M34x1,5 - M34x1,5, 4,90 m	
		Elaflex low temp hoses 9.00m	
	WM046775-0014	- LT SL 16 mm, male THD, R1" BSP - 3/4"	
	WM046777-0014	- LT SL 21 mm, MALE THD, R1" BSP - 1"	

No.	Part Number	Description	Amount
		Elaflex biodiesel hoses 3.02m (non LT)	
	WM046775-0003	- Non LT SL 16mm Biodiesel, male THD, R1" BSP - 3/4"	
	WM046777-0003	- Non LT SL 21mm Biodiesel, male THD, R1" BSP - 1"	
		Elaflex biodiesel hoses 4.30m (non LT)	
	WM046775-0006	- Non LT SL 16mm Biodiesel, male THD, R1" BSP - 3/4"	
	WM046777-0006	- Non LT SL 21mm Biodiesel, male THD, R1" BSP - 1"	
		Elaflex biodiesel hoses 4.90m (non LT)	
	WM046775-0009	- Non LT SL 16mm Biodiesel, male THD, R1" BSP - 3/4"	
	WM046777-0009	- Non LT SL 21mm Biodiesel, male THD, R1" BSP - 3/4"	
		Elaflex biodiesel hoses 9.00m (non LT)	
	WM046775-0015	- Non LT SL 16mm Biodiesel, male THD, R1" BSP - 3/4"	
	WM046777-0015	- Non LT SL 21mm Biodiesel, male THD, R1" BSP - 1"	
	WR001440-0001	ID=19mm, l=3.5m, black	
	WR001442-0001	ID=19mm, l=4m, black	
	WR001443-0001	ID=19mm, l=4.5m, black	
	WR001445-0001	ID=16mm, l=3.5m, black	
	WR001447-0001	ID=16mm, l=4m, black	
	WR001449-0001	ID=16mm, l=4.5m, black	

11.5 Hose sleeve

11.5.1 Hose sleeve for 16mm hose

No.	Part Number	Description	Amount
	WM007104-0001	Cover moulded, black	
	WM007104-0002	Cover moulded, blue	
	WM007104-0008	Cover moulded, BP dark blue	

No.	Part Number	Description	Amount
	WM007104-0009	Cover moulded, BP light blue	
	WM007104-0004	Cover moulded, green	
	WM007104-0011	Cover moulded, light green	
	WM007104-0012	Cover moulded, grey	
	WM007104-0006	Cover moulded, orange	
	WM007104-0003	Cover moulded, red	
	WM007104-0007	Cover moulded, white	
	WM007104-0005	Cover moulded, yellow	
	WM007104-0011	Cover moulded, light yellow	

11.5.2 Hose sleeve for 21mm hose

No.	Part Number	Description	Amount
	WM007545-0003	Cover moulded, black	
	WM007545-0001	Cover moulded, blue	
	WM007545-0008	Cover moulded, BP dark blue	
	WM007545-0009	Cover moulded, BP light blue	
	WM007545-0005	Cover moulded, green	
	WM007545-0010	Cover moulded, light green	
	WM007545-0012	Cover moulded, grey	
	WM007545-0006	Cover moulded, orange	
	WM007545-0004	Cover moulded, red	
	WM007545-0007	Cover moulded, white	
	WM007545-0002	Cover moulded, yellow	
	WM007545-0011	Cover moulded, light yellow	

11.6 Break-awaway, sight glass etc

No.	Part Number	Description	Amount
	WM002348	Sight glass	
	WM009476	Break-away with swivel, diesel	
	WM002058	Coupling straight male M42x1.5. female M32x1.5	

No.	Part Number	Description	Amount
	WM002024	Break-away with swivle	
	WM003994	Swivel, diesel	
	WM002015	Swivel	
	WM002068	Break-away male THD M34x1.5 female THD 34x1.5	
	WM002030	Sight glass VR	
	WM003048	Swivel, Male 42x1.5. female 1"	
	WM045080	Break-away and swivel, diesel Australia	
	WM038270	Break-away with swivel as marked	
	WM041849	Break-away male THD M34x1.5 female THD 34x1.5 as marked	
	WR001415	Break-away, female M34, female M34	
	WR001416-0001	Swivel, with break-away, male 3/4", female 3/4"	
	WR001417-0001	Break-away, female 1"NPT, female 1"NPT	
	WR001417-0002	Break-away, female 3/4"NPT, female 3/4"NPT	
	WR001418	Break-away, female 1"NPT, female 1"NPT	
	WR001419	Break-away, female 3/4"NPT, female 3/4"NPT	
	WR001398-0001	Swivel, male 3/4NPT, female 3/4NPT	
	WR001398-0002	Swivel, male 1NPT, female 1NPT	
	WR001399-0001	Swivel, male 3/4NPT, female 3/4NPT	
	WR001400-0001	Swivel, male 1NPT, female 1NPT, plane of rotation 45°	
	WR001403-0001	Sight glass, male 3/4NPT, female 3/4NPT, without filter	
	WR001404-0001	Sight glass, male 3/4NPT, female 3/4NPT, with Helix	
	WR001404-0002	Sight, male 1NPT, female 1NPT, with Helixt glass	
		Check valve, safety pressure peak (option)	
	WM008731	- Hose, 1" NPT	
	WM008731-0001	- Hose, 3/4" NPT	

11.7 Nozzle lock - Padlock

No.	Part Number	Description	Amount
1	WM003189	Padlock	
		Pin	
2	WM032132-0001	- 1 nozzle, l = 103 mm	

11.8 Bayonet coupling

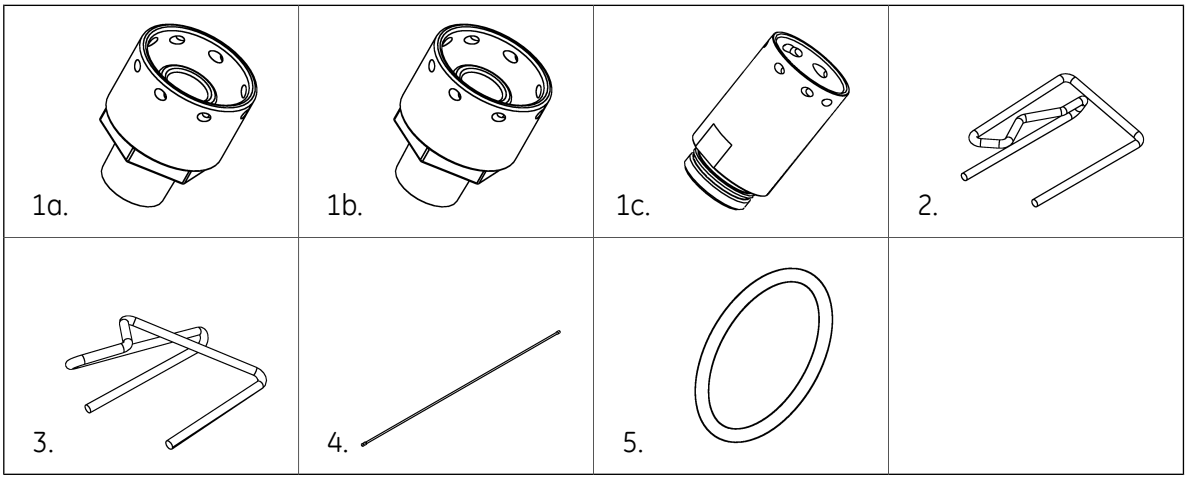

No.	Part Number	Description	Amount
		Coupling, straight Elaflex hose	
1a	WM051877-0001	- 16mm, no VR	
1b	WM051877-0002	- 21mm, no VR	
1c	WM051912	- VR	
2	WM051911	Lock pin wire dia=3,2mm	
3	WM051893	Lock pin wire dia=3,2mm	
4		**Hose, bayonet coupling**	
	WM032867-0001	- Id=16, l=4,32m, no VR	
	WM032867-0002	- Id=16, l=4,32m, LT, no VR	
	WM032867-0003	- Id=16, l=4,32m, biodiesel, no VR	
	WM032869-0001	- Id=21, l=4,32m, no VR	
	WM032869-0002	- Id=21, l=4,32m, LT, no VR	
	WM032869-0003	- Id=21, l=4,32m, biodiesel, no VR	
5		**O-ring**	
	WM044244-0001	- No VR, t=4.2, di=23	

No.	Part Number	Description	Amount
	WM053701	- VR	

12 Cables

See also drawing WM048976.

12.1 Misc.

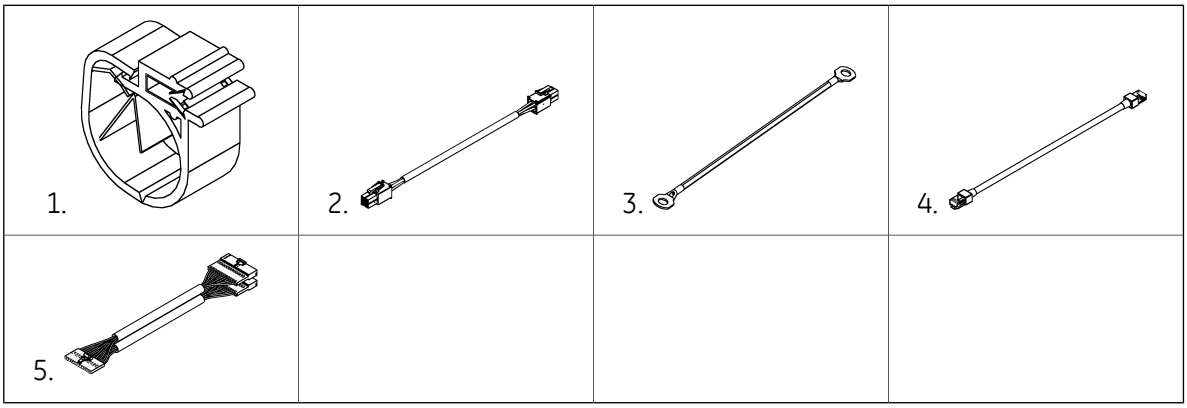

No.	Part Number	Description	Amount
1	WM031974	Plastic fastener EC27	
2	WM019845-0002	Cable 4x0.34, l=1200, Used either with check valves (an option for Vapor Gate, which is a VR option) or with Wayne VAC	
3	WM003933-0001	Cable single wire, 1x0.75 GN/YE, l=150, Grounding cable for SPM (all PT configs) and S/V display (10.4" config.)	
4	WM049795-0003	Etherline CAT5e, l=1800, For UPD in LEE, both with and without PT and also SPM to iX when PT (config. with 2 iX boards, i e 5.7" color or 10.4" display).	
5	WM050160-0001	Cable multi 2 pc 12x0.25 l=200, 200 (IEC) (only use when have IPB and preset (non-ADA) at the same time)	

12.2 Annunciator/buzzer/beeper for PT

Annunciator/buzzer/beeper for PT, see page 95.

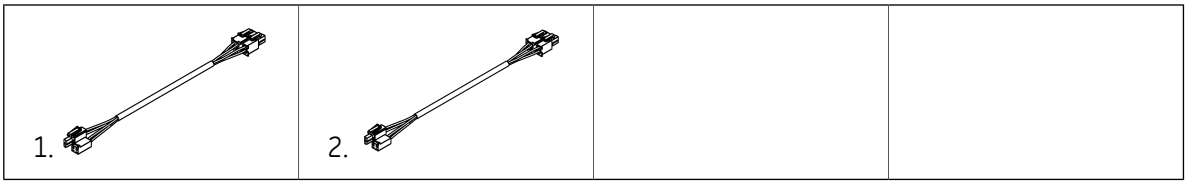

No.	Part Number	Description	Amount
1	WM040568-0001	Cable 4x0.34, l=600, (UL), only monochrome 5.7" display	1
2	WM048852-0001	Cable 4x0.34, l=600, (IEC)	1

12.3 ATC

ATC, see page 177.

1. 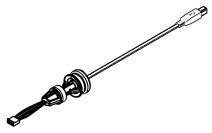	2. 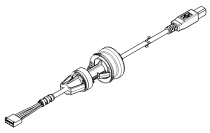	3. 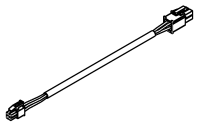	4. 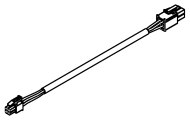
5. 	6. 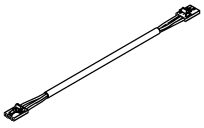	7. 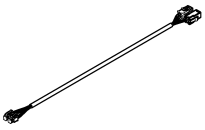	

No.	Part Number	Description	Amount
1	WM042343-0001	Moulded vapor barrier grommet and cable, l=650 (UL)	1
2	WM044872-0001	Moulded vapor barrier grommet and cable, l=650 (IEC)	1
3	WM042321-0001	Cable 4x0.34 L=400, iGEM to TTL/CAN conv.board (UL)	1
4	WM048859-0001	Cable 4x0.34 L=400, iGEM to TTL/CAN conv.board (IEC)	1
5	WM040866-0001	Cable 4x0.34 L=1100, TTL/CAN conv.board to ISB (UL)	1
6	WM048858-0001	Cable 4x0.34 L=1100, TTL/CAN conv.board to ISB (IEC)	1
7	WU008819-0001	Cable assembly, CAN bus, iGEM to TTL/CAN converter, l=400 (UL)	1

12.4 Cable harness (LEE to EH)

1. 	2. 	3. 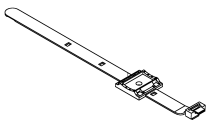	

No.	Part Number	Description	Amount
		Cable harness	
1	WM043007	- UL	1
2	WM043088	- IEC	1
3	WU008226-0001	Harness clamp for rail	4

12.5 Card reader

Card readers, see page 68.

1. 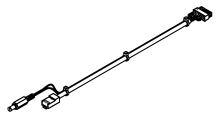	2. 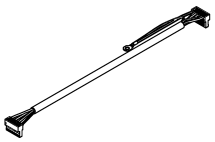	3. 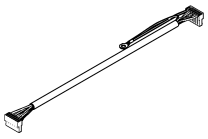	4. 

No.	Part Number	Description	Amount
1	WU001091-0001	Cable multi SPM, to Sankyo card reader, RS232 WU001002-0001	1
2	WM040280-0001	Cable multi 6x0.34, l=600, Only for card reader WU003908-0001, UL cable version	1
3	WM048842-0001	Cable multi 6x0.34, l=600, Only for card reader WU003908-0001 - IEC cable version	1
4	WU008412-0001	Cable, SPM, Only for card reader WU008412-0001, UL cable version, non ADA	1

12.6 Citizen (UL only)

Citizen printer, see page 79.

1. 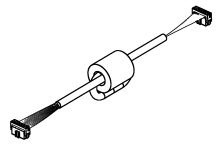	2. 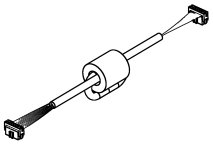		

No.	Part Number	Description	Amount
1	WM040220-0001	Cable round jacketed 10-position, l= 700, Printer data with SPM.	1
2	WM040220-0002	Cable, ix board to citizen printer, l=2500, Printer data when no SPM.	1

12.7 Barcode scanner

Barcode scanner, see page 75.

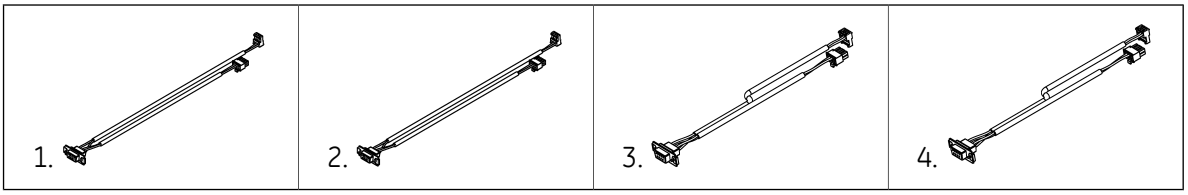

No.	Part Number	Description	Amount
1	WM049322-0001	Cable multi, l=750, iX to scanner and SPM when 10.4" display (IEC)	1
2	WM049322-0002	Cable multi, l=750, iX to scanner and SPM when 5.7" display color (IEC)	1
3	WU008898-0001	Cable, RS-232/24V, iX to Scanner and SPM when 5.7" display monchrome + SPM (UL)	1
4	WU008898-0002	Cable, RS-232/24V, iX to Scanner when 5.7" display monchrome only (UL)	1

12.8 EMT

EMT, see page 91.

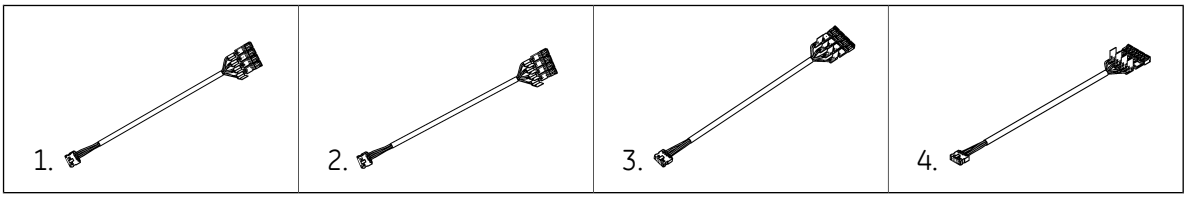

No.	Part Number	Description	Amount
1	WM045337-0001	Cable 8x0.34 l=1750, EMT to iGem when EMT in LEE (UL)	1
2	WM045337-0002	Cable, igem to EMTs, l=200, EMT to iGem when EMT in EH (UL)	1
3	WM048862-0001	Cable 8x0.34 l=1750, EMT to iGem when EMT in LEE (IEC)	1
4	WM048862-0002	Cable 8x0.34 l=250, EMT to iGem when EMT in EH (IEC)	1

12.9 Heater

Heater see page 102.

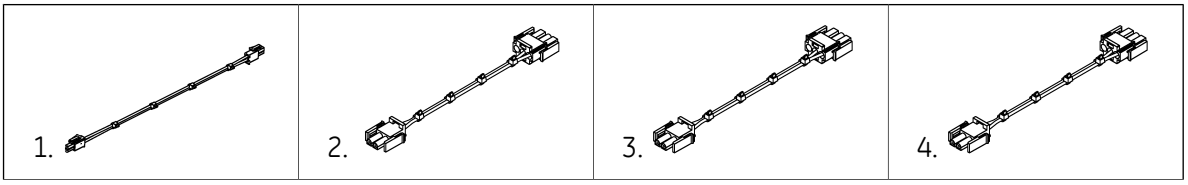

5. 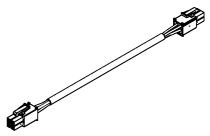	6. 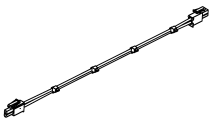	7. 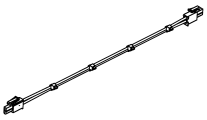	

No.	Part Number	Description	Amount
1	WM023796-0005	Cable multi, l=700, 24V power to heater (IEC) (PT)	1
2	WM044536-0001	Cable multi, l=400, AC power to heater 230V (UL)	1
3	WM048860-0001	Cable multi, l=400, AC power to heater 230V (IEC) (PT)	1
4	WM048860-0002	Cable multi, l=600, AC power to heater 230V (IEC) (no PT)	1
5	WM019845-0002	Cable 4x0.34, l=1200, Used either with check valves (an option for Vapor Gate, which is a VR option) or with Wayne VAC	1
6	WU008645-0002	Cable 24VDC power, l=700, power to heater (UL)	1
7	WM023796-0001	Cable multi, 1x0.5 RD, l=1000, 24V, Power to heater when no PT (IEC) or Power to Ethernet switch	

12.10 iButton/Dallas key

iButton/Dallas key, see page 75.

1. 			

No.	Part Number	Description	Amount
1	WM053793-0001	Cable, 2x0.5 l=2300	1

12.11 ISB

ISB, see page 42.

1. 	2. 		

No.	Part Number	Description	Amount
1		**Cable round jacketed 16-position l=300 for 2nd ISB**	
2	WM040216-0002	- UL	1 *1
3	WM048878-0002	- IEC	1 *1

*1 Only needed if 2 ISB:s (cable between them).

12.12 Junction box

12.12.1 Junction box UL

Junction box UL, see page 169.

1. 			

No.	Part Number	Description	Amount
1	WM045755-0001	Cable multi junction box to connection board, suction pump, l=760	1

12.12.2 Junction box IEC

Junction box IEC, see page 170.

1. 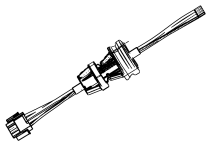	2. 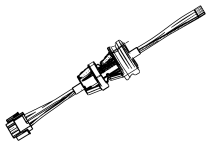	3. 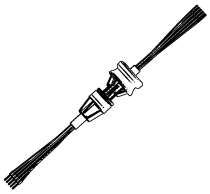	4. 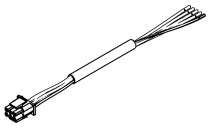
5. 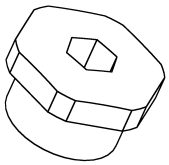	6. 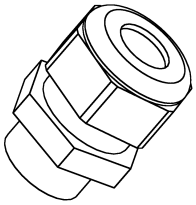	7. 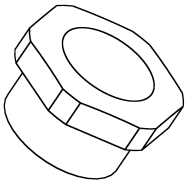	8. 

No.	Part Number	Description	Amount
1	WM045736-0001	Moulded vapor barrier grommet and cable, 4G2.5, l=750, (400V power)	1
2	WM045734-0001	Moulded vapor barrier grommet and cable, 5G1.5, l=700 (230V power)	1

No.	Part Number	Description	Amount
3	WM045732-0001	Moulded vapor barrier grommet and cable, 4G2.5, l=750 (data)	1
4	WM025912-0001	Cable high voltage, 5G1.5, zone l=1800 (dis-penser relay)	1
5		**Grommet blind**	
	WM001591	- M20	
	WM003241	- M25	1, 2, 3
6		**Grommet**	
	WM029991	- M16, dia 5-10 mm	
	WM029992	- M20, dia 7-12 mm	1, 2, 3
	WM007739	- M20 hummel dia 7-12 mm	1
	WM029998	- M20, dia 10-14 mm	2
	WM003257	- M25 dia 13-18 mm	
7	WM017027	Grommet reducer M20 male-M16 female	
8		**Sealing VET**	
	WM047274-0001	- Diameter=21, cable diameter 7-12	2
	WM047274-0002	- Diameter=27, cable diameter=7-12	2
	WM047276-0001	- Diameter=35, cable diameter=13-19	2
	WM047276-0002	- Diameter=40, cable diameter=13-19	2

12.13 LED-Com

LED-Com, see page 100.

1. 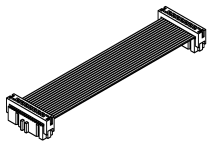

No.	Part Number	Description	Amount
1	WM003861-0002	Cable flat, 16-position, l=400 for LED-Com (IEC)	1

12.14 Media Display

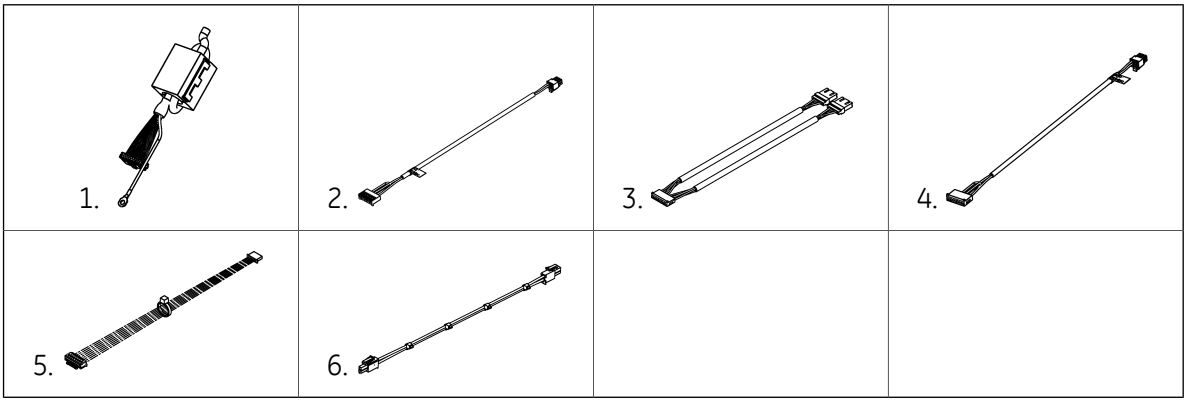

No.	Part Number	Description	Amount
		5.7" Media display (monochrome)	
1	WM040238-0001	Cable round SC, Jacketed 16-position l=1800	1
		5.7" Media display (color)	
2	WM043672-0001	Cable multi 2x0.34, l=400, iX board to TFT interface board, LED drive.	1
		10.4" Media display	
3	WM048853-0001	Cable multi 5x0.34, l=300 for Soft keys (IEC), from soft keys (10.4") to iX board	1
4	WM043677-0001	Cable multi 2x0.34, l=400, (IEC), LED driver board to iX board	1
5	WU002745-0001	Cable multi LED backlight (IEC), data to LED driver board	1
6	WM023796-0004	Cable multi, 1x0.5 l=300, (IEC), TFT board to S/V display (24V)	1

12.15 MUX

MUX see page 103.

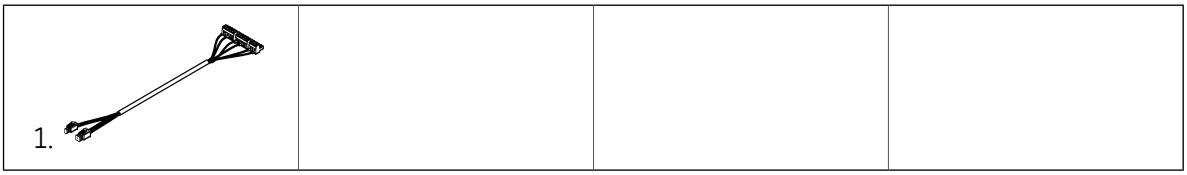

No.	Part Number	Description	Amount
1	WM051769-0001	Cable, 6 x 0.5	1

12.16 Nozzle converter

Nozzle converter see page 62.

1. 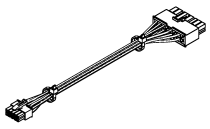	2. 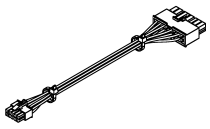		

No.	Part Number	Description	Amount
		Cable 10x0.34 l=200 nozzle switches	
1	WM040747-0001	- UL	
2	WM048857-0001	- IEC	

12.17 Nozzle switch

1. 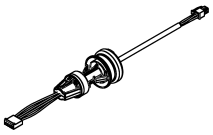	2. 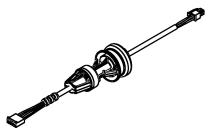		

No.	Part Number	Description	Amount
1	WM040992-0001	Moulded vapor barrier grommet and cable, l=650 (UL)	1
2	WM044870-0001	Moulded vapor barrier grommet and cable, l=650 (IEC)	1

12.18 Power supply

Power supply, see page 43.

1. 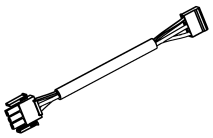	2. 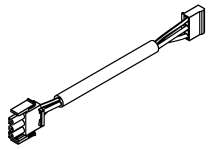	3. 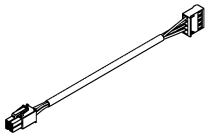	4. 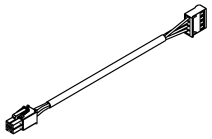

No.	Part Number	Description	Amount
1	WM040286-0001	Cable high voltage 3G1.0 zone l=350, AC power (UL)	1 *1
2	WM048848-0001	Cable high voltage 3G1.0 zone l=350, AC power (IEC)	1 *1
3	WM040297-0001	Cable 4x0.5 l=400, DC power (UL)	1 *1
4	WM048849-0001	Cable 4x0.5 l=400, DC power (IEC)	1 *1

*1 One extra power supply needed if more than one iX board.

12.19 Preset

Preeset kaypad, see page 63.

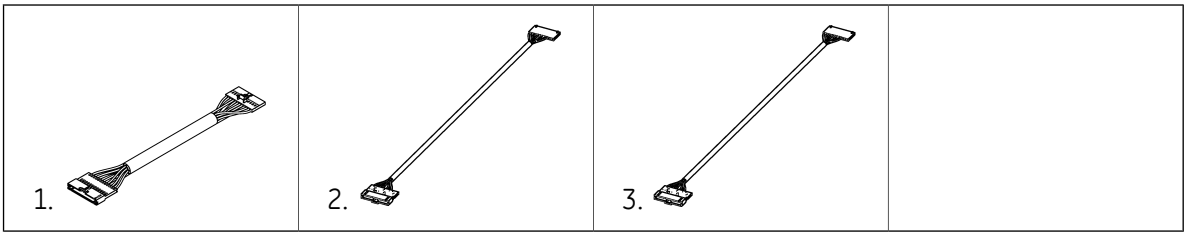

No.	Part Number	Description	Amount
1	WM047436-0001	Cable 12x0,34, l=500	1
2	WU007486-0001	Cable, preset with payment terminal, l=1800mm, (UL)	1
3	WU007486-0002	Cable, preset, l=800mm, (UL)	1

12.20 Protocol board cables

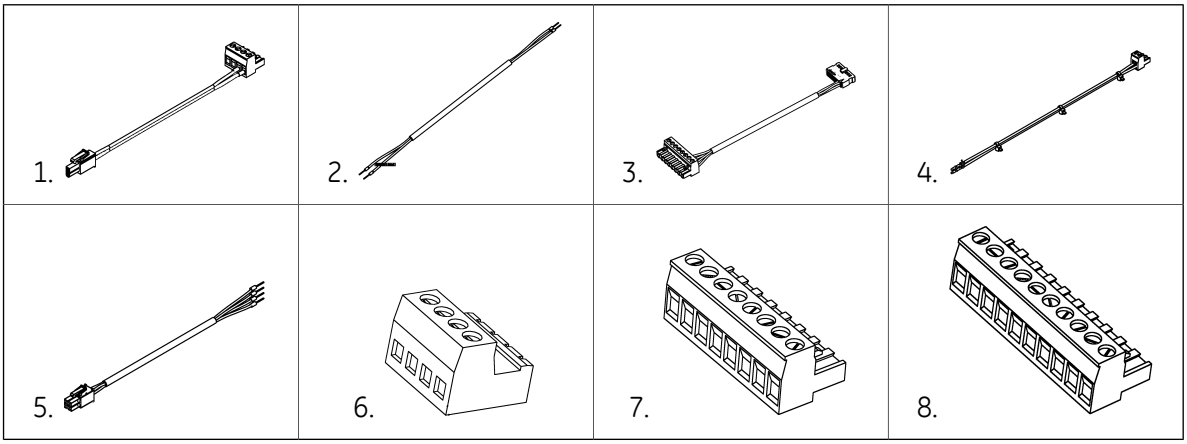

No.	Part Number	Description	Amount
1	WM048975-0001	Cable multi 1x0.5 br l=150, 1x0.5 wh l=150 (UKCL, USCL)	1
2	WM010634-0001	Cable 2x0.5 zone l=250 (IFSF LON)	1
3	WM003736-0002	Cable 4x0.34 l=500 (ATCL)	1
4	WM035206-0001	Cable multi 1x0.5 rd l=280, 1x0.5 bk l=280 (AT-CL)	1
5	WM006833-0005	Cable 4x0.5 l=900 (SINP/NPCL)	1
6	WT002215	Connector, cable, terminal block 4 socket (1x4) (USCL)	1
7	WM001043	Connector, cable, terminal block 8 socket (1x8)	1
8	WT002458	Connector, cable, terminal block 10 pin (1x10)	1

12.21 PT and media

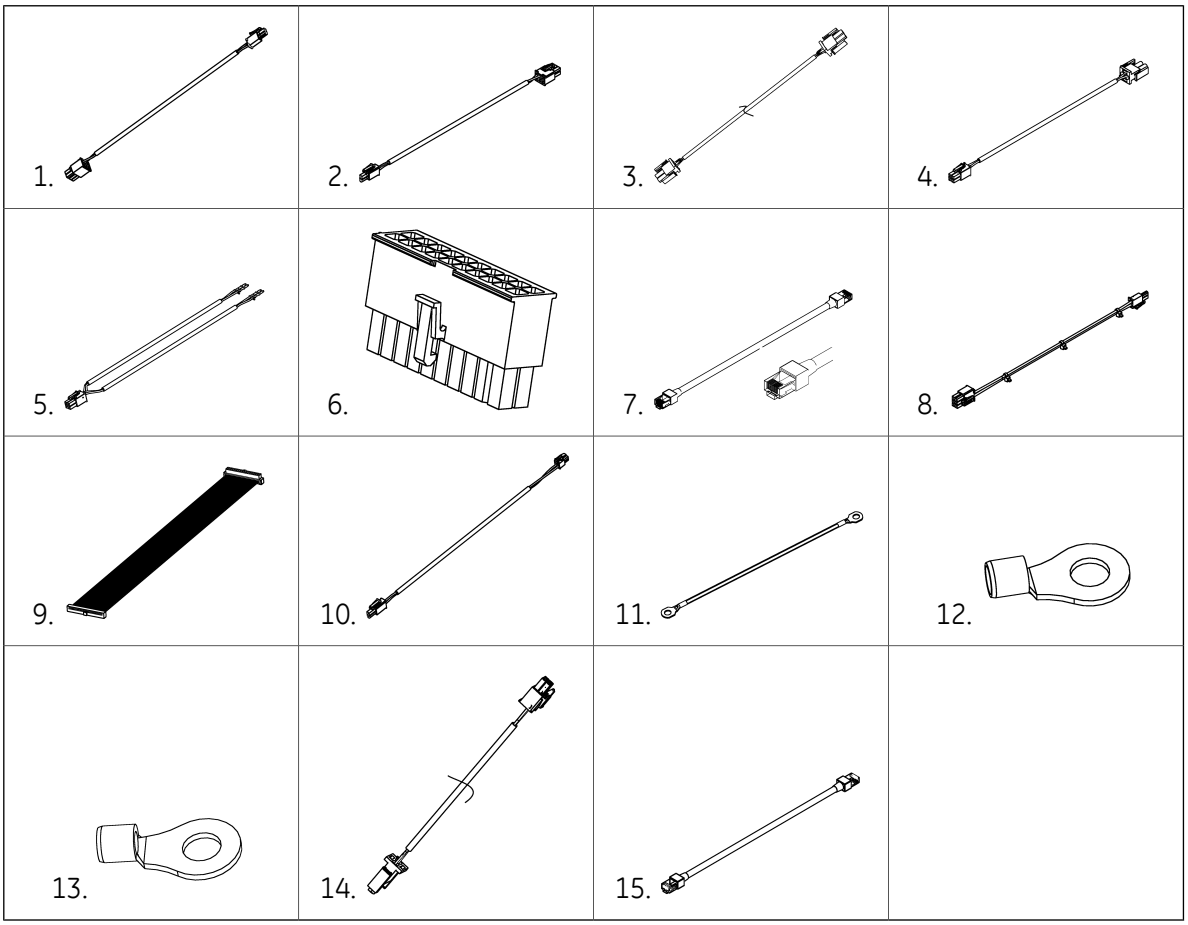

No.	Part Number	Description	Amount
1	WM040490-0001	Cable 2x0.75, l=600, from connection board to iX board 5.7" mono displ. (UL)	1
2	WM048851-0001	Cable 2x0.75, l=600, from connection board to iX board (IEC)	1
3	WM040913-0001	Cable 2x0.34, l=600 for RS485 from iX to Connection board (UL)	1
4	WM048875-0002	Cable 2x0.5, l=1800 for RS485 from iX to Connection board (IEC)	1
5	WM023176-0003	Cable multi 2x0.34, l=1500 (IEC), from iGEM to TFT board (goes from both A and B side)	1
6	WM003347	Connector, cable, mini UMNL, 20 pin (2x10) (IEC) Connetor for TFT cable (WM023176-0001)	1
7	WM040870-0001	Cable etherline, CAT5e, l=1000, from iX board to Ethernet switch for monochrom 5.7" displ.	1
8	WM020667-0003	Cable multi 1x0.5, l=500, (IEC), TFT (24V) to iX board	1

No.	Part Number	Description	Amount
9	WM021228-0001	Cable flat, 34 PIN, l=300, (IEC) Flat cable 10.4": display to iX board. 5.7": TFT board to iX board	1
10	WM023148-0001	Cable 2x0.34, l=400, (IEC), TFT board to iX board, CAN interface	1
11	WM048861-0002	Cable single wire, l=1050, grounding of PT bezel (IEC)	1
12	WM045328-0002	Cable single wire, 4mm ring terminals, l=1050, grounding of PT bezel (UL)	1
13	WM045328-0003	Cable single wire, 4mm ring terminals, l=200, grounding of printers (UL)	1
14	WU007882-0001	Cable, RS485, to iX board payment without Wayne Connect (UL)	1
15	WM049795-0001	Cable etherline CAT5e L=1000 (IEC) Cable from Ethernet board to iX board when Media	1

12.22 Pulser

Pulser, see page 154.

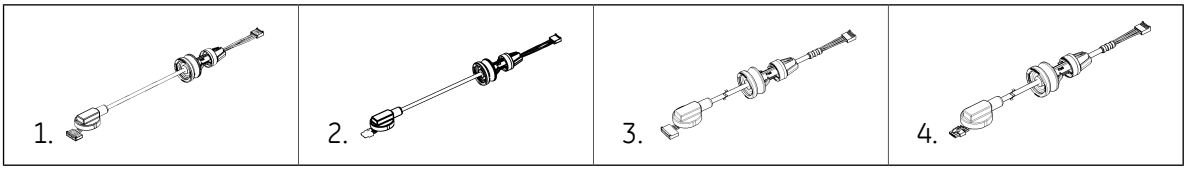

No.	Part Number	Description	Amount
1	WM040834-0001	Moulded vapor barrier grommet and cable, l=950 (WIP, UL)	1
2	WM040996-0001	Moulded vapor barrier grommet and cable, l=950 (xWIP, UL)	1
3	WM044873-0001	Moulded vapor barrier grommet and cable, l=950 (WIP, IEC)	1
4	WM044871-0001	Moulded vapor barrier grommet and cable, l=950 (xWIP, IEC)	1

12.23 Single push-buttons

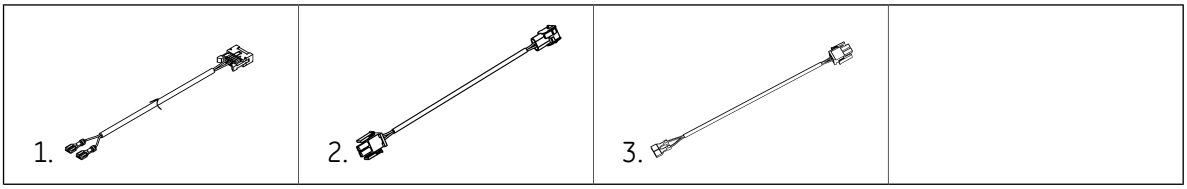

No.	Part Number	Description	Amount
1	WU007675-0001	Cable, stop button-sv display, cable from stop button to S/V display (via PT harness)	1
2	WU008413-0001	Cable, LEE harness to call button board, l=2000, cable for intercom call button (via PT harness)	1
3	WU008414-0001	Cable, call button to call button board, l=300, cable for intercom call button to board	1

12.24 Speaker Intercom

Speaker Intercom see page 91.

1. 			

No.	Part Number	Description	Amount
1	WU008645-0001	Cable, 24VDC power, l=500	1

12.25 SPM

1. 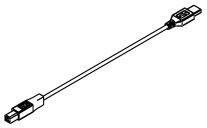	2. 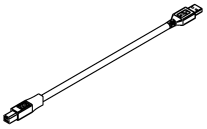	3. 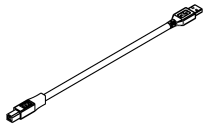	4. 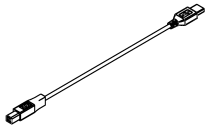
5. 	6. 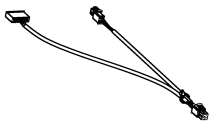	7. 	

No.	Part Number	Description	Amount
1	WM024585-0002	Cable USB type A male - type B male, l=700, iX to SPM, 5.7" display. Only for QVGA (IEC).	1
2	WU008808-0002	Cable, USB type A male - type B male, l=200, 5.7" color display. Only for color QVGA (UL).	1
3	WU008808-0004	Cable, USB type A male - type B male, l=2000, 5.7" monochrome display. Only for monochrome QVGA (UL).	1
4	WM024585-0004	Cable USB type A male - type B male, l=2000, iX to SPM, 10.4" display. Only for VGA (IEC).	1
5	WM036758-0002	Cable from connection board to SPM (24V), Power to SPM (IEC)	1

No.	Part Number	Description	Amount
6	WU007487-0001	Cable multi, 24V, Connector Board-SPM/Citizen Printer, mono 5.7" display. Only for Citizen printer and 5.7" monochrome display (UL).	1
7	WU008870-0001	Cable, ground strap, Grounding cable for SPM, UL only.	1

12.26 Switchable motor, se page 104

12.27 UPD in EH

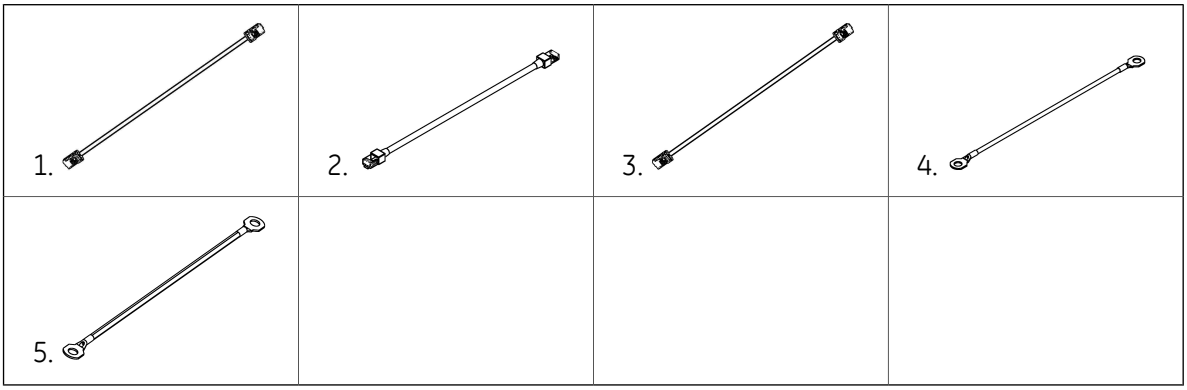

No.	Part Number	Description	Amount
1	WM040870-0008	Cable, etherline CAT5e l=500 for display data/power. Only for EH placement of UPD. (UL)	1
2	WM049795-0008	Cable, etherline CAT5e l=500 for display data/power. Only for EH placement of UPD. (IEC)	1
3	WM040870-0003	Cable, etherline CAT5e l=1800, display data/power. Only for LEE placement of UPD (UL)	1
4	WM030107-0001	Cable single wire, 1x0.75 BK L=800 (IEC), grounding for UPD board	1
5	WM003933-0002	One per UPD board, only when payment and UPDs are down in LEE	1

12.28 Zebra printer

Zebra printer, see page 76.

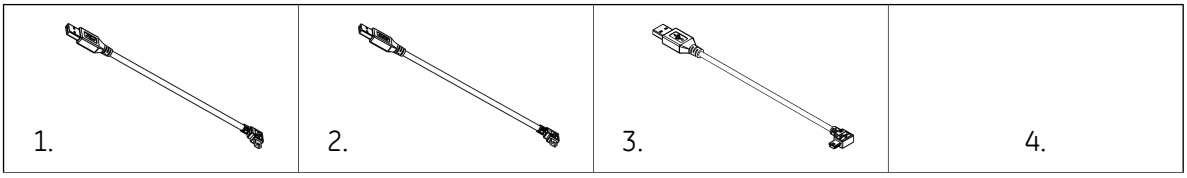

5. 	6. 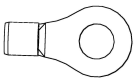		

No.	Part Number	Description	Amount
1	WM042821-0002	Cable USB type A male - mini B right angle male, l=700, Only with color QVGA (5.7" display) (UL)	1
2	WM042821-0001	Cable USB type A male - mini B right angle male, l=2500, Only with monochrome 5.7" display (UL)	1
3	WM049793-0001	Cable USB type A male - mini B right angle male, l=2500, Only with VGA 10.4" display (IEC)	1
4	WM045724-0001	Cable 4x0.5, l=1900+600, 24V Power to Zebra and SPM, for all Zebra positions (UL)	1
5	WM042854-0002	Cable 2x0.5 L=1000, from SPM to Printer, (IEC)	1
6	WM045328-0004	Cable single wire, ground, 4mm ring terminals, l=410 (UL). Grounding cable for Zebra printer (UL)	1

12.29 4 User cables

No.	Part Number	Description	Amount
1	WM052381	4U upper connector board	
2	WM053733-0001	Cable, 10x0.5, l=500	
3	WM054209	Cable single wire, 2 PC 1x0.34 BK (Used together with WU006752-0001)	
4	WM052394-0001	Cable multi, 10x0.5 BK, l=200, 300 (Only used when 4U and UPD combination 3+1)	
5	WM052391-0001	Cable multi, 10x0.5 BK, L=200, 300 (Only used when 4U and UPD combination 2+2, 1+1 or 2+1)	
6	WM005501-0002	Cable multi, 1x0.5 rd l=500, 1x0.5 bk, l=500 (24V cable between CPU boards)	
7	WM052379-0001	Cable, 2x0.34 L=1300 (Only used when 4U and UPD combination 3+1)	

No.	Part Number	Description	Amount
8	WM054123-0001	Cable flat, round jacketed 16-position 1.27-pitch l=1000 (Only used when 4U and UPD combination 2+2, 1+1 or 2+1)	
9	WM054122-0001	Cable flat, round jacketed 10-position 1.27-pitch l=600 (In harness, but added extra)	
10	WM050322-0001	Cable multi, 2 pc 2x0.5 l=1000 ,2 pc 1x0.5 gr/ye l=200	
11	WM005501-0002	Cable multi, 1x0.5 RD L=500, 1x0.5 BK L=500	
12	WM052394-0001	Cable multi, 10x0.5 bk l=200, 300	
13	WM053733-0001	Cable, 10x0.5 l=500	

13 Misc. (Tools / Remote control)

13.1 Tools / Remote control

1. 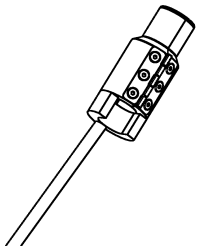	2. 		

No.	Part Number	Description	Amount
1	WM047463	Tube removal tool (See also service manual W048523, chapter: "Product tube replacement")	
2	WM002290	Remote control with battery	1
	WM002289	Battery LR03 size AAA 1.5V to the remote control	2

13.2 UK Installaion, Helix 6000

No.	Part Number	Description	Amount
1	WM048723	Support, U-shape break away, vapour recovery UK	1
2	WB000212-0007	Screw, hexagon socket CAP, M8x40	2
3	WM007664	Washer, plain id=8,2 od=18 t=1	2
4	WB000228-0004	Nut, M8	2
5	WM045648	Gasket ID=18, OD=40, T=6	6
6	WM020591	Coupling, straight male GE 3/8" D=10	1
7	WB000343-0001	Bushing , male R1/2" x female Rp3/8"	2
8	WM020431	Coupling, 90 degree male WE 3/8" D=10	1
9	WM035703	Coupling, T-coupling female 1/2"	1
10	WM035704	Ball valve male 1/2" - female 1/2"	1
11	WU007721-0001	Tube, flexible triangular flange 185mm	1
12	WB000213-0001	Screw, hex head, M8 x 30	3
13	WM022836-0001	Washer, plain, M8 id=8,4, od=17, t=1,6	3

No.	Part Number	Description	Amount
14	WM044091	Gasket triangular 1 1/2"	1
15	WM044092	Flange triangular 1 1/2" B.S.P.	1
16	WM035667	Cover Di=104 H=45	1
17	WM035659	Cap di=101,6 non threaded	1

See also installation instruction "Helix 6000, Vapour recovery UK" - WM054067.

Warranty

Any alternations or, additions to, or unauthorized work performed on the equipment without manufacturer's express written consent shall void any existing product warranty. Please see product warranty information for additional details.

Use only genuine parts.

Copyright notice

© 2012 Wayne, A GE Energy Business. The contents of this manual may not be copied in whole or in part without the express written consent of Wayne.

Wayne reserves the right to make revisions to this manual without prior notice.

Wayne

A GE Energy Business

Headquarters
Wayne
Dresser, Inc.
3814 Jarrett Way
Austin, TX 78728
USA

Wayne Sweden
Dresser Wayne AB
Hanögatan 10
Box 50559
SE-202 15 Malmö
Sweden

Wayne China
Dresser Wayne Fuel
Equipment
(Shanghai) Co., Ltd.
1221 Dong Lu Road
Pudong, Shanghai
China

Wayne Brazil
Dresser Industria e
Comercio Ltda.
Estrada do Timbo
126-Bonsucesso
Rio de Janeiro,
Brasil

© 2014 Wayne, A GE Energy Business

WM048522 Rev 04 04/2014